A.C. MODULAR GENERATOR SYSTEM

OWNERS MANUAL

MODEL#: ER-6.2, ER-8, ER-10 and ER-110
For Compartment or Top Mounting

9991031 Rev. O

Table of Contents

Section **Page**

Disclaimer **5**
Description of Product **6**
System Specifications **9**
Pre-Installation Guide **11**
Installation Guide **17**
Hose Installation Guidelines **21**
Operation **29**
Special Operating Instructions **36**
Maintenance Instructions **37**
Troubleshooting Guide **40**
Pump Adjustment **49**
SPS Model Matrix **53**

Doc. 9991031 Rev. O

ECO #16709

WARNING:

Do not install or operate the A.C. modular generator system without reading this entire manual.

The A.C. modular generator system will generate enough voltage to produce a fatal electrical shock. Do not perform any wiring installations or modifications while the system is operating. Never touch any live connections while the system is operating. Never operate the system with the generator wiring enclosure open. Install and secure cover before operating.

The installation of the Smart Power Systems® A.C. modular generator system is to be done in accordance with applicable sections in the National Fire Protection Association's document NFPA 1900, National Electrical Code®, and/or other applicable, recognized electrical codes and by a certified electrician.

Never directly expose the generator to any liquids, especially water, oil, or solvents. Electrical shock, fire and/or damage to the generator can occur and will void the system's warranty.

Smart Power Systems® hydraulic generators, as well as all generators, must be sufficiently protected from the environment to prevent damage to the stator. Smart Power stators go through a very important double-dip coating process prior to generator assembly, however, exposure to direct water sprays can cause the stator to electrically short. Generator damage and electrical shock can occur.

Caution should be taken during truck pressure washing, since water damage to the generator can occur if directly sprayed with high water pressure. Though Smart Power Systems® (SPS) generators are enclosed as much as possible, direct spray through the cooler, fan or open lid can still cause such damage.

Excessive road spray/salt can also cause an electrical short of the stator in the generator and can also shorten the generator's operating life. To prevent this type of damage, do not mount the system where it will be exposed to road spray.

Evidence of water damage, road spray/salt infiltration, and improper mounting will void the generator warranty.

Avoid physical contact with any of the components of the A.C. modular generator system during its operation or immediately after its use. The components of this system will get hot enough to cause burns and could ignite combustible materials.

Do not mount or locate anything inside of the framework. System overheating could result and void the system's warranty.

Never operate the system with leaks of any type. Clean up any hydraulic fluid that is spilled or has leaked out of the system. Hydraulic fluid is combustible, and ignition may occur.

With the exception of oil filter periodic replacement, never modify or remove any of the components within the tray assembly.

Never modify or remove any of the components within the pump or the controls mounted to the pump. This includes all fittings and tubing that were originally provided with the A.C. modular generator system.

Never make any adjustments to the pump other than for flow control. If it appears the pump needs to be adjusted, contact Smart Power Systems® at (231) 832-5525 before proceeding. Damage to the generator from improper pump adjustment will void the system's warranty.

Never attempt any adjustments or repairs to the A.C. modular generator system (other than pump flow control) while the vehicle engine is running and the PTO is engaged.

Never operate the system with the hydraulic fluid exceeding 195°F. Above this temperature, hydraulic fluid can rapidly oxidize and deteriorate causing generator performance problems. Operating the system while the hydraulic fluid is above 195°F will void the system's warranty.

Hydraulic fluid is combustible and toxic. In the event of human contact with hydraulic fluid, generously flush body part (eyes, skin, etc.) with running water. Avoid inhalation of any oil mist or vapor. Do not ingest hydraulic fluid. In case of fire, use foam, dry chemical, or carbon dioxide to extinguish flame.

Do not exceed the wattage rating of the generator. The generator may be permanently damaged, and the generator and hydraulic components may reach temperatures that could cause severe burns upon human contact with the components. Operating the generator system at wattages above the system's rating will void the system's warranty.

Disengage the system immediately if a hydraulic fluid leak is detected. Operation of the A.C. modular generator system with low fluid level will result in permanent damage to the hydraulic components in the system and will void the system's warranty.

Do not attempt to operate the generator with the tray assembly top lid open. Do not tamper with the top lid interlock switch or the hydraulic fluid level sensor.

Never attempt to operate the system without hydraulic fluid. Always maintain a fluid level between ½ to ¾ full in the sight gage.

Operating the A.C. modular generator system in the presence of flammable vapors may result in an explosion.

Use only hoses that meet or exceed the minimum requirements specified in this manual. A ruptured hose can cause personal injury and/or damage to the generator system.

Do not operate the system under electrical load with air in the hydraulic fluid (the system will make a growling sound). Do not allow anything to contact the hydraulic hoses that will cause a kink, pinch or chafing. The A.C. modular hydraulic system generates hydraulic pressures approaching 3600 psi. A ruptured hose may result from abrasion, discharging hot, high-pressure hydraulic fluid, which can cause serious personal injury, fire, and/or damage to the system.

Never remove the guards on the generator to expose the rotating fan or motor coupling. Personal injury will result if fingers, hair, or loose clothing come in contact with rotating components.

Disclaimer

Although SPS has taken all reasonable care to ensure that the information contained in this installation manual (including without limitation, references, databases, resources, specifications, illustrations and instructions) was accurate in all material respects at the time of publication, SPS PROVIDES NO ASSURANCE, REPRESENTATION, WARRANTY OR GUARANTEE, expressed or implied (including third party liability), with regard to this manual, including without limiting the generality of the foregoing, with regard to its accuracy, reliability or completeness. The entire information contained in this installation manual is provided by SPS "AS IS" and without warranty of any kind, express or implied, including (but not limited to) any implied warranties of merchantability, fitness for any particular purpose, or non-infringement. Accordingly, by using the SPS unit and this information, you agree that, to the greatest extent permitted by law, SPS (including, without limitation, its subsidiaries, affiliates, agents, officers, directors, employees and insurers) is not and will not be liable for losses or damages resulting from this installation manual, its use, any information contained therein or the installation of the SPS unit.

This installation manual contains references to certain databases and resources. As SPS has no control over these databases and resources, you acknowledge and agree that SPS is not responsible or liable for any content, advertising, products, information, or other materials on or available from such database or resources. You further acknowledge and agree that SPS shall not be responsible or liable, directly, or indirectly, for any damage or loss caused or alleged to be caused by or in connection with use of or reliance on any such content, information goods, or services available on or through any such database or resources. All product illustrations and specifications are based upon current information at the time of publication. Although descriptions are believed correct, complete accuracy cannot be guaranteed. SPS reserves the right to make changes of any kind at any time, without notice or obligation, in the information contained in this installation manual. All data and information of any kind are subject to change without notice and SPS assumes no obligation to update or correct information in this manual.

As some states do not allow the exclusion or limitation of liability for consequential or incidental damages, the limitation contained herein may not apply to you. In such states, SPS' liability is limited to the greatest extent liability limitation is permitted by applicable law.

Description of Product

Hydraulic Generator Applications:

This heavy-duty electronically controlled generator system has been designed to meet the most demanding mobile applications. It provides 120/240-volt AC @ 60 Hz from no-load to full load, handling electrical loads of 6200, 8000 and 10000 watts, depending on model.

How our System works:

A generator driven by a hydraulic motor delivers electrical power. The motor turns at 3600 RPM as controlled by the flow of hydraulic fluid through an electrically controlled proportional valve. The proportional valve is directly driven by the system controller. The piston pump delivers fluid to the proportional valve through installer-supplied PTO mounted to the vehicle's transmission.

Heat generated in the hydraulic fluid as it passes through the various components in the system is cooled by a heat exchanger and fan. A filter removes impurities in the fluid. A venturi boost assembly monitors the volume of oil in the hydraulic circuit and feeds the system from the reservoir as needed.

Essentially, the only system maintenance required is periodic replacement of the hydraulic fluid filter and adding hydraulic fluid to maintain the fluid level (when the hydraulic fluid is between 70° and 80° F, it should be at the ¾ mark on the sight gauge).

Generator hydraulic and electrical schematics: Reference Figures 1 and 2.

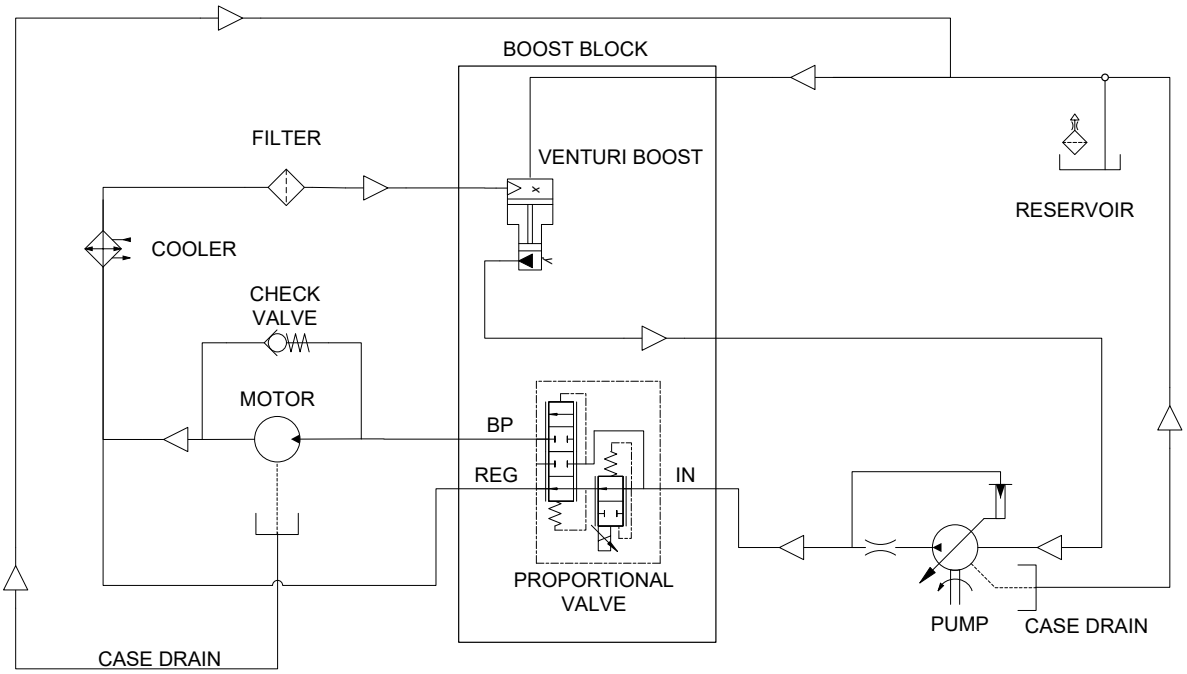

Figure 1 – Hydraulic Generator Schematic for ER-6.2, ER-8, ER-10 and ER-110

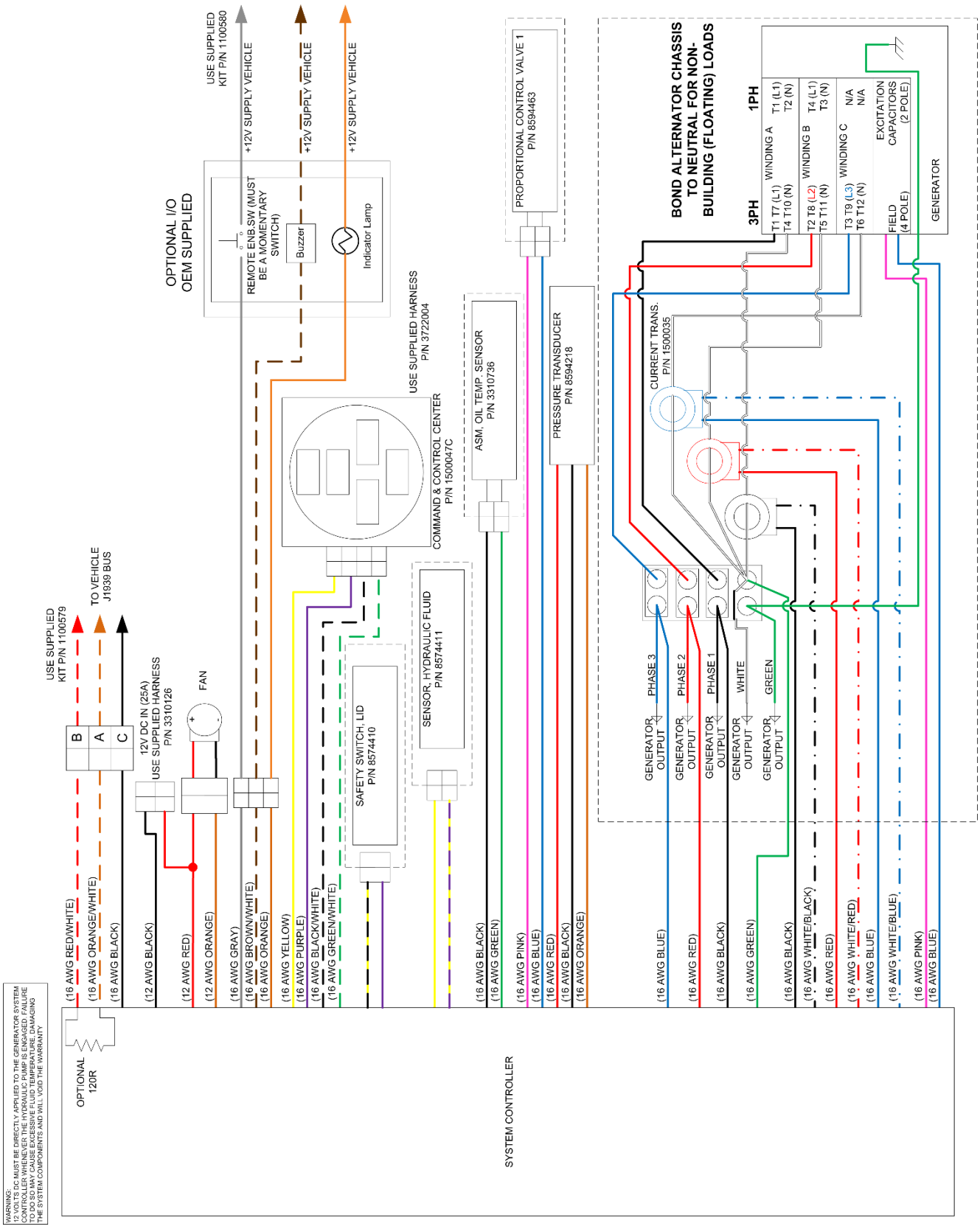

Figure 2 – Generator Electrical Schematic for ER-6.2, ER-8, ER-10 and ER-110

System Specifications

MODEL OF GENERATOR	ER-6.2	ER-8	ER-10	ER-110
Generator Type	AC Inductive	AC Inductive	AC Inductive	AC Inductive
Speed Frequency Voltage	3600 RPM 60 Hz 240 VAC or 120/240 VAC	3600 RPM 60 Hz 240 VAC or 120/240 VAC	3600 RPM 60 Hz 240 VAC or 120/240 VAC	3600 RPM 60 Hz 240 VAC or 120/240 VAC
Amperage	52A @ 120 VAC or 26A @ 240 VAC	67A @ 120 VAC or 34A @ 240 VAC	84A @ 120 VAC or 42A @ 240 VAC	84A @ 120 VAC or 42A @ 240 VAC
Output Power	6.2 KW continuous 7.5 KW peak	8 KW continuous 9 KW peak	10 KW continuous 12 KW peak	10 KW continuous 12 KW peak
Hydraulic Motor	Gear Type, 8cc	Gear Type, 8cc	Gear Type, 11cc	Gear Type, 11cc
Maximum Speed	4000 RPM	4000 RPM	4000 RPM	4000 RPM
Motor Shaft Size	0.626 inches 9 tooth spline	0.626 inches 9 tooth spline	0.626 inches 9 tooth spline	0.626 inches 9 tooth spline
Port Size	7/8” – 14 SAE 7/8” – 14 SAE	7/8” – 14 SAE 7/8” – 14 SAE	7/8” – 14 SAE 7/8” – 14 SAE	7/8” – 14 SAE 7/8” – 14 SAE
Hydraulic Pump	Piston w/pressure compensated control	Piston w/pressure compensated control	Piston w/pressure compensated control	Piston w/pressure compensated control
Operating Speed	**880-3000 RPM** continuous duty	**880-3000 RPM** continuous duty	**1100-3000 RPM** continuous duty	**850-2700 RPM** continuous duty
Standard Shaft	SAE B 7/8”-13 Tooth Spline	Spline, SAE B 7/8”-13 Tooth Spline	Spline, SAE B 7/8”-13 Tooth Spline	SAE B-B 1” 15 Tooth Spline
Optional Shaft	SAE 1” parallel with key	SAE 1” parallel with key	SAE 1” parallel with key	SAE 1¼” parallel with key
Mounting Flange	SAE B-2 bolt mount	SAE B-2 bolt mount	SAE B-2 bolt mount	SAE B-2 bolt mount
Displacement Continuous	45cc per revolution	45cc per revolution	45cc per revolution	60cc per revolution
Pressure (Max)	3500 psi (250 bar)	3500 psi (250 bar)	3500 psi (250 bar)	3500 psi (250 bar)
Peak Pressure	4600 psi (315 bar)	4600 psi (315 bar)	4600 psi (315 bar)	4600 psi (315 bar)
Standard Rotation	Engine right-hand rotation (opposite engine rotation available upon request)	Engine right-hand rotation (opposite engine rotation available upon request)	Engine right-hand rotation (opposite engine rotation available upon request)	Engine right-hand rotation (opposite engine rotation available upon request)
Dry Weight	46 lbs.	46 lbs.	46 lbs.	51 lbs..

Table 1

MODEL OF GENERATOR	**ER-6.2, ER-8**	**ER-10, ER-110**
Oil Cooler Dimensions (Core)	2.25”D x 22.6” W x 9.75” H	2.25”D x 22.6” W x 9.75” H
Fan Voltage Amperage	12 Inch Pusher 12 Volts DC 20 Amps	12 Inch Pusher 12 Volts DC 25 Amps
Filter	10 Micron	10 Micron
Hydraulic Oil (recommended) (alternate) Op. Temp. range(deg. F.)	ISO Approved Hydraulic Fluid Dexron III -13° F to 195° F	ISO Approved Hydraulic Fluid Dexron III -13° F to 195° F
Hoses Motor Inlet All Others	JIC STD 3600 psi, SAE 1250 psi, SAE	JIC STD 3600 psi, SAE 1250 psi, SAE
Fittings	SAE	SAE
Dry Weight **(without pump)**	ER-6.2 235 lbs. ER-8 235 lbs.	ER-10 255 lbs. ER-110 255 lbs.
Dimension of Tray Assy.	33 ¾” L x 15 ¾” W x 13 ¾” H (Including Reservoir)	33 ¾” L x 15 ¾” W x 13 ¾” H (Including Reservoir)
Ambient Operating Temperature Range	0°F to 120°F	0°F to 120°F

Table 1 (cont.)

Pre-Installation Guide

Pre-Installation Check List

1. Verify that the Power Take Off (PTO) and the pump rotations match.

   To identify the pump rotation, check the pump part number found on the metal tag attached to side of the pump. A right-hand rotating pump (the standard pump offered by Smart Power Systems®), will have the letter "**R**" in its part number.
   Example: A10VO (45 or 60) DFR-1/52 **R** PUC.

   A left-hand rotating pump will have the letter "**L**" in its part number.
   Example: A10VO (45 or 60) DRF-1/52 **L** PUC.

   Depending on genset model, a 45cc or 60cc pump is supplied. To determine the PTO rotation, check the PTO manufacturer's specification or observe the PTO when it is engaged with the vehicle's engine running.

   A right-hand rotating pump requires a PTO that turns counterclockwise when looking at the free end of the PTO shaft. A left-hand rotating pump requires a PTO that turns clockwise when looking at the free end of the PTO shaft.

WARNING:

Operating the pump with reverse rotation will damage the pump and void the system's warranty.

2. Verify that the PTO ratio is properly sized to provide adequate speed to the hydraulic pump during normal operation of the generator system. The PTO speed must be between in the range specified in Table 1 for your model generator.

   Example: For an HR-8 System that is to operate at 650 RPM engine speed:
   PTO Ratio = 880 RPM ÷ 650 RPM = 1.35 or 135% (or higher)

WARNING:

Never exceed the maximum pump shaft speed. Pump failure or premature pump wear will result. Doing so will void the system's warranty.

3. Verify the combined weight of the pump and hoses filled with hydraulic fluid do not exceed the PTO manufacturer's weight restriction. If the pump weight does exceed this restriction, the installer has two options: A) a bracket to support the pump can be implemented, or B) the pump can be mounted to the vehicle chassis, connected to the PTO with a drive shaft.

4. Verify that the pump shaft will mount to the PTO. Pumps supplied by Smart Power Systems® have a SAE B 2 bolt flange. The standard pumps supplied by Smart Power Systems® have either a SAE B 7/8" 13 tooth spline for Models ER-6.2, ER-8 and ER-10; OR a SAE B-B 1" 15 tooth spline on the ER-110 model.

   Upon special order, a 1" keyed shaft is available on Models ER-6.2, ER-8 and ER-10. A 1 ¼" keyed shaft is available on the ER-110 Model. Check the PTO manufacturer's specification to verify that the pump supplied with the system will mount to the PTO installed on the vehicle.

   Note: In some cases, it may be necessary to mount the pump remote from the PTO and drive it with a drive shaft. Contact the PTO manufacturer for information on the proper mounting configuration under these conditions.

WARNING:

The installer must provide guarding to prevent damage to the pump seals from road debris if the pump is remotely located. Also, properly sized and installed vibration isolators must be used if the pump is mounted to the chassis. Failure to do either will void the system's warranty.

Never use an unbalanced drive shaft to drive a remotely located pump. An unbalanced drive shaft will cause premature wear of the pump and will void the system's warranty.

Do not approach a running A.C. modular generator when wearing long, loose items such as hair, jewelry, ties, clothing, etc. Direct contact with a rotating drive shaft can cause serious personal injury and/or damage to the system.

5. Obtain the following hoses of the necessary length for the installation:

   a) Pump inlet hose: 1" SAE 100R1AT-16 hose (use Parker hose ends P/N 10643-16-16). Note: To ensure adequate hydraulic fluid flow rate to the pump, hose lengths exceeding 20 feet require a hose size at least one size larger than specified above. Please contact Smart Power Systems at (231) 832-5525 for technical support.

   b) Pump outlet hose: 1/2" SAE 100R9AT-8 rated to **4000 PSI** (use Parker hose ends, part number 10643-8-8). **Note:** For lengths greater that 20', It is NOT recommended to increase diameter.

c) Pump case drain hose: 5/8" SAE 100R1AT-10 (use Parker hose ends, part number 10643-10-10).

The graph below is for inlet hoses. It shows pressure drops with different I.D. hoses and flow rates.

Note: Baseline data was collected with the hose at zero incline. Hydraulic pressure (PSI) will increase with elevation. See Note 7 below for additional information.

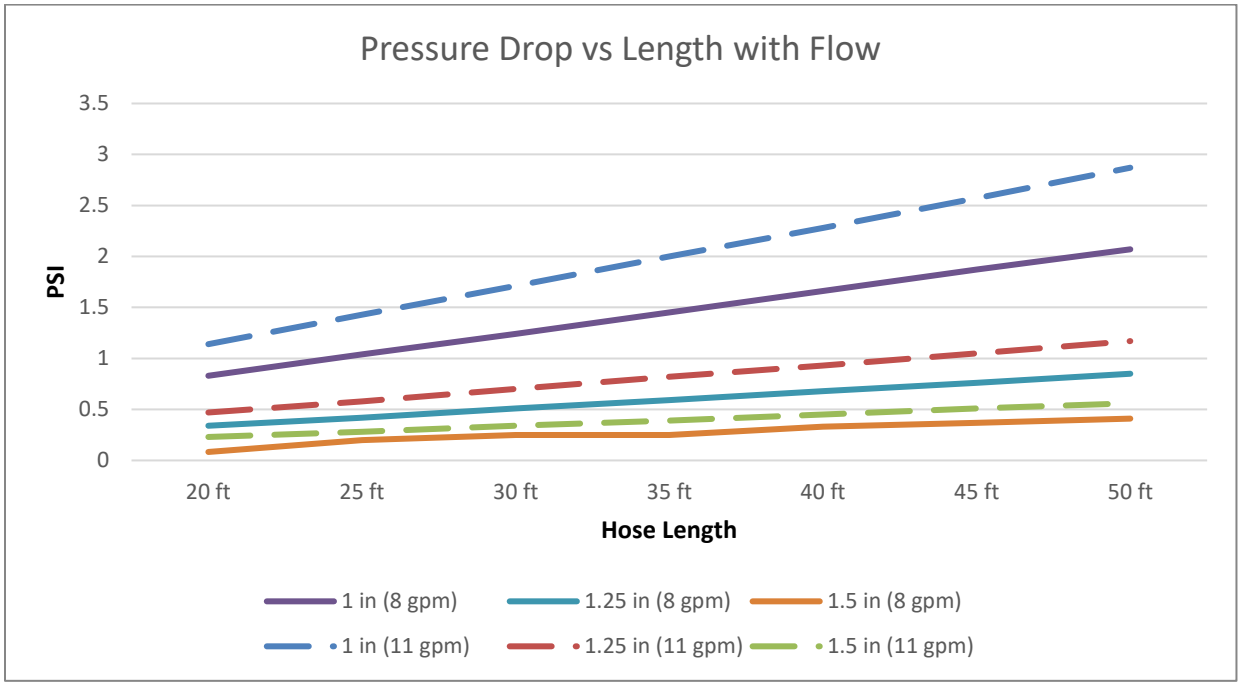

WARNING:

Do not install hose ends until proper hose length has been determined.

Ensure debris is kept out of the hoses and hydraulic system prior to installation.

Never install a hose in a location where it will rub against another surface or abrasion member.

Do not position hoses with tight bend radii. Consult the hose manufacturer's installation guidelines. Tight bends may kink and cause serious damage to the system and will void the system's warranty.

Use caution when tightening the hose ends to prevent the hose from becoming twisted.

Never install a 90° fitting at the pump inlet or outlet. Avoid the use of flow restricting fittings.

Do not form loops in the hose that may collect air or kink. Run hoses as straight as possible (but not taut) between connections.

Smart Power has fully tested and approved ISO fluids

ISO #32, #46 and #68 are approved for use in all Smart Power hydraulic generators.

Complete testing was performed using U.S. Oil Multi-Vis R Hydraulic Fluid under controlled environments ranging from below freezing to above NFPA's high temperature requirements. The systems ran within our tight performance specifications using all three listed grades.

ISO #32 is recommended when ambient temperatures are generally between 2 and 56°F.
ISO #46 is recommended when ambient temperatures are generally between 10 and 74°F.
ISO #68 is recommended when ambient temperatures are generally between 27 and 95°F.
For additional information on ISO fluids, contact U.S. Oils, or your local ISO grade fluid supplier.

6. SPS models ER-6.2, ER-8, ER-10 and ER-110 can be mounted on top of a vehicle, in the open, without requiring any additional coverings. Reference Figure 3. for the minimum clearances around the perimeter of the generator's tray assembly. Also, do not position any obstructions directly in front of the system's oil cooler. If the system cannot be installed without maintaining the minimum clearances as indicated, or if you have any questions related to the installation of these systems, contact Smart Power Systems® at (231) 832-5525.

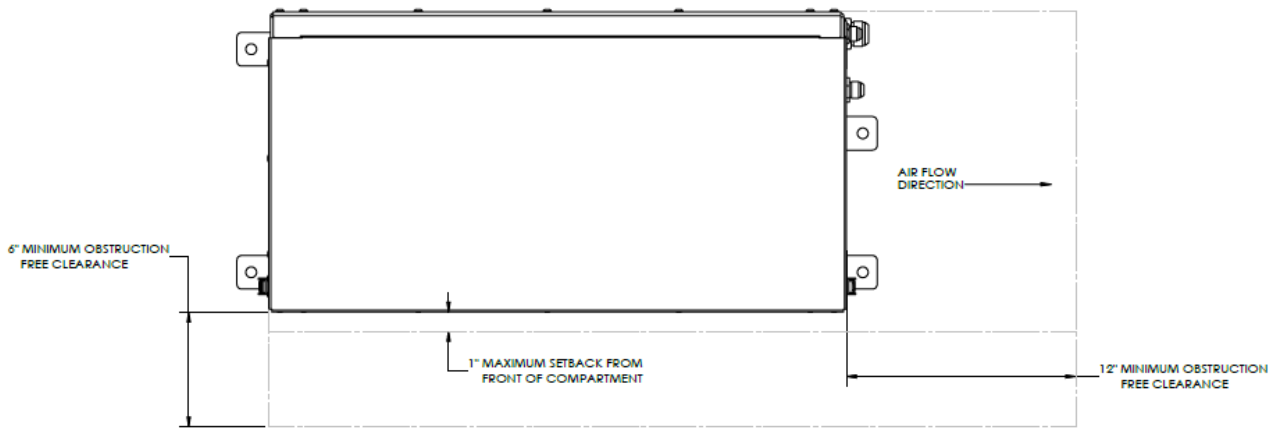

Figure 3 – Top View of ER-6.2, ER-8, ER-10 and ER-110 Tray Assemblies Showing Minimum Clearance for Proper Ventilation

WARNING:

Do not mount the hydraulic pump or tray assembly in any location that is not well ventilated. External heat sources elevating the hydraulic fluid and/or the generator temperature will result in premature wear and degraded system performance and void the system's warranty.

7. The tray assembly must be mounted in a position that is higher than the pump. If the pump inlet hose is 10' in length or less, the tray and reservoir assemblies must be a minimum of 12" higher than the pump. **If the pump inlet hose is longer than 10', elevate the tray and reservoir assemblies an additional 12" for every additional 10' of pump inlet hose length.** See below for examples of minimum tray assembly elevations above the pump:

Pump inlet hose length	Minimum tray and reservoir elevation (above pump)
0 – 10 ft.	12 inches
15 ft.	18 inches
>20 ft.	24 inches

Please contact Smart Power Systems at (231) 832-5525 for technical support

8. Locate a position to mount the SPS Command & Control Center. The ideal location for the Command & Control Center will be in an area that is easily seen and accessed by the generator operator. When the generator system is in use, the Command & Control Center will continuously show the status of the generator, including faults (warnings) if they occur. The Command & Control Center can also be used to engage and disengage the generator. The Command & Control Center is water sealed and operates on low voltages, so pump house mounting is permissible. A 15 ft. water sealed harness is provided to connect the Command & Control Center to the system controller mounted within the generator tray assembly. Reference Figure 4 for dimensions of the Command & Control Center.

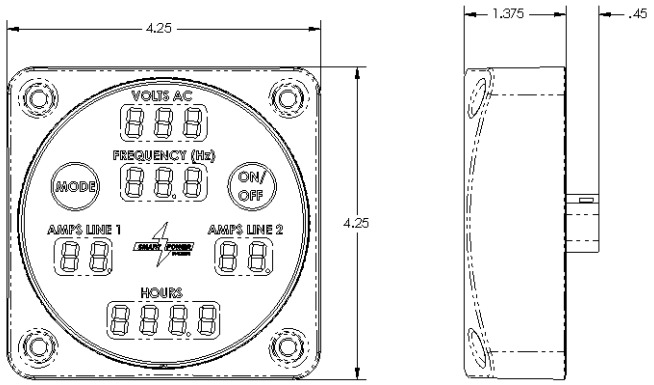

Command & Control Center, P/N 1500047
Figure 4

Installation Guide

1. Mount the pump securely to the Power Take-Off (PTO). This may require attaching a mounting bracket to the PTO housing prior to mounting the pump.

WARNING:

Always mount the hydraulic pump in a position with the pump controls up. Mounting the pump in any other orientation will not allow hydraulic fluid in the pump to reach the correct level before starting, causing premature wear of the pump, thus voiding the system's warranty. The pump and undercarriage components will corrode if they are left unprotected. It is advisable to paint them before completing the installation.

2. Locate and bore mounting holes for generator tray assembly as shown in Figure 5. Maintain minimum clearances as indicated in Figure 3.

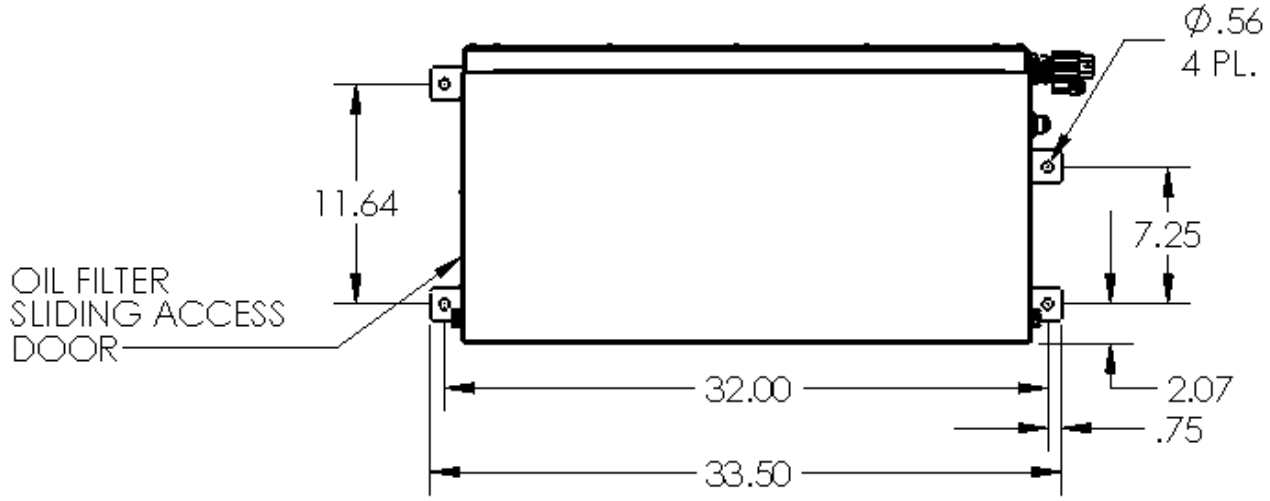

Figure 5 – Mounting Hole Pattern for ER-6.2, ER-8, ER-10 and ER-110 Assemblies

3. Mount the tray assembly as high as possible within the structure of the vehicle. The ideal location for the generator is at the top of the truck in the dunnage area. The manufacturer must also take sufficient precautions to ensure that the generator is not mounted in the path of the deck gun/water cannon.

4. Mount the hydraulic generator tray securely to vehicle. Secure the generator to the floor of the enclosure using hardware (not included), as shown in Figure 6.

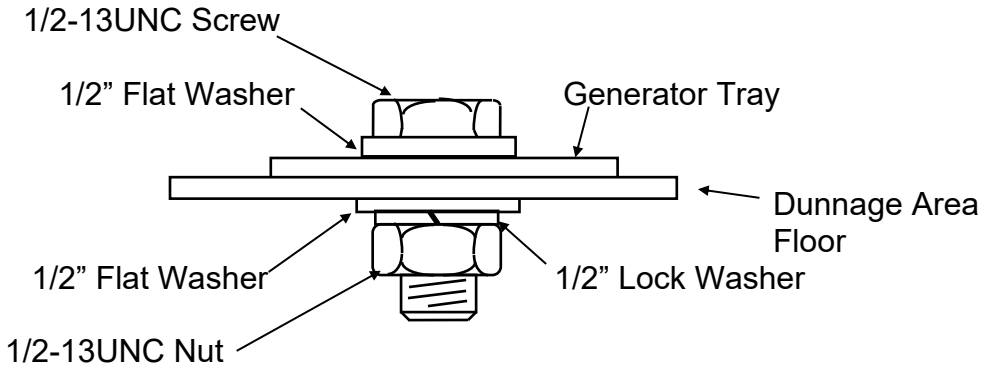

Figure 6

WARNING:

Never mount the Generator on its side or upside down. Always mount the generator upright with its base horizontal. Improper mounting will lead to poor performance and damage to the system and will void the system’s warranty.

Never operate an AC modular generator system that is not secured in place; damage will result.

Do not mount the hydraulic pump or tray assembly in any location that is not well ventilated. External heat sources elevating the hydraulic fluid and/or the generator temperature will result in premature wear and degraded system performance and void the system’s warranty.

5. Mount Command & Control Center:

   a. Create hole pattern as shown in Figure 7.
   b. Mount Command & Control Center to vehicle using #10 stainless steel button head or cap screw fasteners. Take care not to overtighten the fasteners, as damage to the plastic Command & Control Center housing may result.
   c. Connect Command & Control Center to system controller unit (Reference Figure 8) using P/N 3722004 harness.

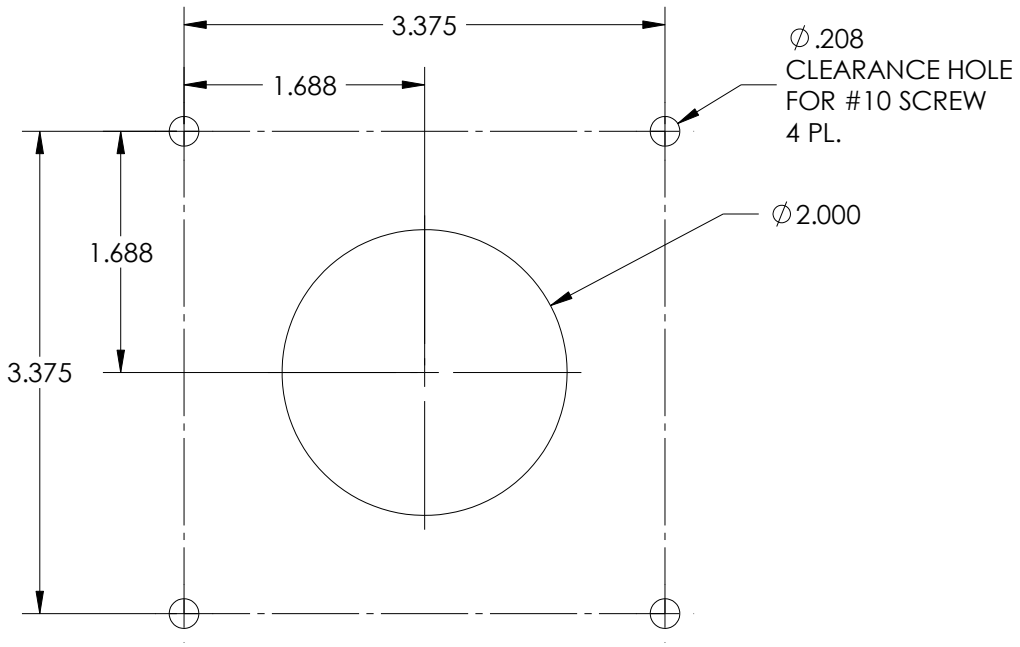

Figure 7 – Command & Control Center Hole Pattern

6. Install hoses and tighten hose ends, using the **Hose Installation Guidelines.** Reference Figure 8 for connection locations.

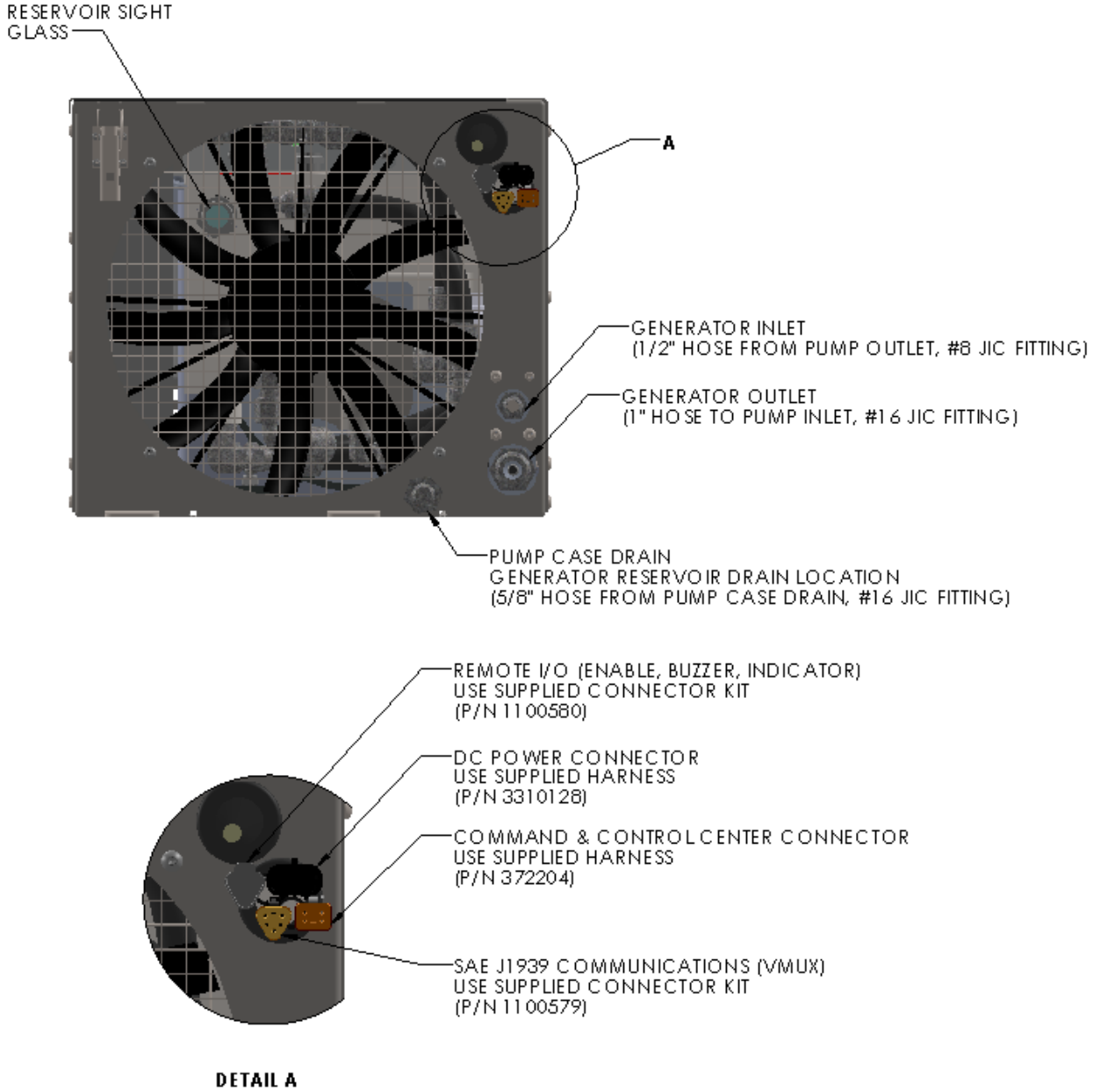

Figure 8 – ER-6.2, ER-8, ER-10 and ER-110 Interfaces

WARNING:

Never operate the system with the pump case drain plugged. Damage to the pump seals will result. To do so will void the system's warranty.

Hose Installation Guidelines

Never install a hose without first properly cleaning it to remove debris and contaminants. It is recommended to clear hoses of debris using a projectile hose cleaning kit and preferred to do so with a cleaning solvent to remove as much contamination as possible.

To keep debris out of hoses while being positioned, cover the ends.

Never install a hose in a location where it will rub against an abrasive surface, sharp edge or corner. Use hose wraps or guards where they make contact with surfaces that may cause detrimental abrasion during flex.

Do not position hoses with tight bend radii. Tight bends may kink and cause serious damage to the system. Consult the hose manufacturer's guidelines when installing hoses.

Use caution when tightening the hose ends to prevent the hose from becoming twisted.

Never install a 90° fitting at the pump outlet or inlet.

Never use an inlet line fitting less than 1".

Never install a hose tightly between connections. Leave length for the hoses to expand.

Do not form loops in the hose that may collect air or cause kinking. Run hose as straight as possible (but not taut) between connections.

Do not bundle installed hoses tightly together with banding. Hoses must have freedom to expand and flex.

Do not operate the system with external stresses applied to the hydraulic hoses. The A.C. modular hydraulic system generates hydraulic pressure approaching 3500 psi. A ruptured hose may result, causing personal injury or damage to the system.

Do not put any substance into the reservoir other than clean, fresh hydraulic fluid. Doing so will void the system's warranty.

7. Connect the vehicle's breaker panel to the generator output. The generator is pre-wired to supply 120/240 VAC, with the generator frame bonded to ground. Route the generator output conduit/wiring to the breaker panel and carefully cut the conduit to length without cutting the wire insulation. A conduit connector has been provided to connect the conduit to the breaker panel. Connect the (4) four generator output wires to the breaker panel as follows:

Phase A:	Black wire (120 VAC)
Phase B:	Red wire (120 VAC)
Neutral:	White wire
Ground:	Green wire

To completely utilize the generator's output capabilities, the 120 VAC loads must be equally divided between the generator's two main windings. Before wiring the vehicle, calculate the wattage of each 120 VAC load that will be connected to the generator. Next, create two groups of loads based on total wattage (add the individual wattage of each load together). Exchange loads between the two groups until the total wattage of the two groups is as close as possible to being equal. Wire the system with one group connected to Phase A (BLACK) and neutral, with the other group connected to Phase B (RED) and neutral.

ALTERNATE CONFIGURATION: 120 VAC only: If the application requires 120 VAC only, the generator terminal strip should be configured as depicted below, and Figure 9. This method ensures balanced loading of the generator, fully optimizing the system's capabilities. Make the following wire connections at the terminal strip:

a) place one jumper between wire 1 and wire 3.
b) place the second jumper between wire 2 and wire 4.
c) connect the phase wire from the breaker box to either wire 1 or wire 3.
d) connect the neutral wire from the breaker box to either wire 2 or wire 4.
e) connect the ground wire from the breaker box to the green wire.
f) remove red sensing wire from breaker on wire 4
g) connect red sensing wire from wire 4 on breaker to wire 1 on breaker

<u>Note: Command and Control Center will still display 240VAC</u>

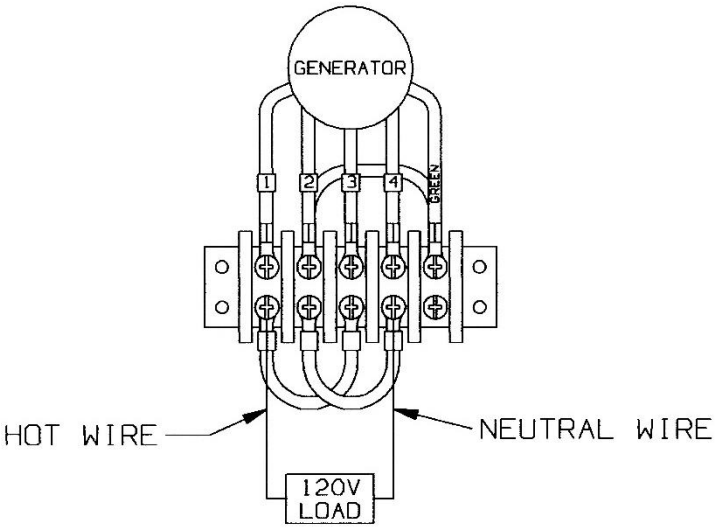

Figure 9 – 120VAC Alternate Wiring

WARNING:

Wiring of the A.C. modular generator system and electrical distribution throughout the vehicle must be done in accordance with applicable sections in the National Fire Protection Association's document NFPA 1900, the National Electrical Code® and/or other applicable, recognized electrical code and by a certified electrician.

Smart Power Systems® A.C. modular generators are supplied with the neutral bonded to ground. Refer to National Fire Protection Association's document NFPA 1900, National Electrical Code®, and/or other applicable recognized electrical codes before wiring an SPS A.C. modular generator system.

Never wire any loads to the generator's output without a circuit breaker in series with the load. Damage to the generator, to the components within that circuit, electrical shock, or fire may result if a short occurs in an unprotected circuit. Run all 120 VAC and 240 VAC electrical connections between the generator and the distribution panel in conduit. Bypassing the SPS factory installed breaker will void the system's warranty. Replacement breakers must be obtained from Smart Power Systems® approved sources only.

Do not perform any wiring installations or modifications while the system is operating. The A.C. modular generator system will generate enough voltage to produce a fatal shock.

Never touch any live connections while the system is operating.

Never operate the system with the generator cover removed.

8. Connect 12 VDC (vehicle battery positive) to the generator's system controller input (reference Figure 8). Connect the RED wire from the system controller, marked "Vehicle +12V supply" to the vehicle's ignition circuit through a 30-amp fuse. Connect the BLACK wire to the vehicle's ground (vehicle battery negative).

WARNING:

12 volts DC must be directly applied to the generator system controller whenever the hydraulic pump is engaged. Failure to do so may cause excessive fluid temperature, damaging the system components and will void the warranty.

Never come near a running fan with loose items such as long hair, clothing, jewelry, ties, items that can fall out of pockets, etc.

Do not attempt to operate the generator with the tray assembly top lid open. Serious personal injury may result if clothing, fingers, or other body parts come in contact with rotating fan blades.

Never operate the system with fan disabled or removed. System over-heating will result, and this will void the system's warranty.

Improper wiring of the generator system to the vehicle may discharge the vehicle battery, cause a fire, or cause improper operation of the generator system.

9. Bleed air from the hydraulic system:

   The system controller has been designed to provide a purge option. With this option applied, the generator will turn at a reduced speed to minimize wear to the system's hydraulic components while purging air from the system. The generator is shipped from the factory with the purge option enabled. Reference Figure 11, below, for instruction on manually enabling purge mode.

   a. Remove the cover, turn off the generator's main power breaker and replace the cover. Refer to Figure 10 for the breaker location on the electrical enclosure.

Figure 10 – Breaker Location

   b. Ensure hoses are securely attached to the hydraulic pump and not connected to the generator.

c. Fill all hoses with fresh hydraulic fluid before connecting them to the generator system. This will significantly reduce the time required to purge air from the system.
d. Fill the Gen-set reservoir with fresh hydraulic fluid until the fluid in the sight gauge is ½ to ¾ from the top. As hydraulic oil fills the system, maintain the level of fluid in the reservoir.
e. Ensure the generator purge option is enabled.
f. Start the vehicle and engage the Power Take-Off (PTO). (Note: Pump may cavitate briefly while air is purging, making noise.)
g. The automatic purging function will cancel after the hydraulic pressure has stabilized, and the Command & Control Center will display all zeroes.
h. Do **NOT** turn the PTO off until purging the system of air is complete. Trapped air in the fluid (foam) is likely to escape through the reservoir breather, causing oil to spill over.
i. Check for hydraulic fluid leaks, all hose connections must be tight. **Continue monitoring the hydraulic fluid level, adding fluid as needed to keep the level in the sight gauge**.

Verify that the generator's output frequency is 59-62 Hz. If the frequency is not within that range, contact Smart Power Systems® at (231) 832-5525 for more information.

WARNING:

Never operate the system without the filler/breather plug installed. Contaminants may enter the hydraulic fluid through the filler opening, causing premature wear on the hydraulic components and void the system's warranty.

Never apply a load to the generator while there is air trapped in the hydraulic fluid. Damage to the system's hydraulic components, as well as ruptured hoses, may result and void the system's warranty.

Always run the purge cycle after installation, after replacing the hydraulic fluid and the filter, or after making any other repairs that may allow air into the hydraulic system. Failure to do so will void the system's warranty.

Enabling System Purge Option

The purge option can also be set by performing the following steps:

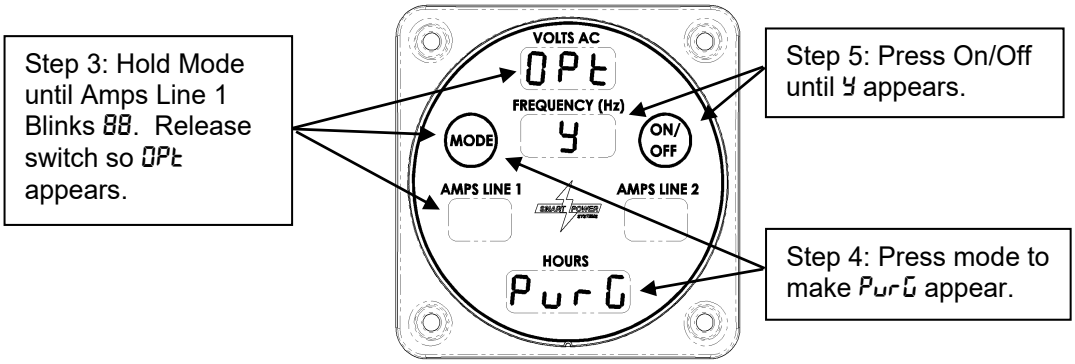

Figure 11 – Enabling Purge Mode

1. If the Command & Control Center is dark, press the Mode switch to put the display into Normal mode.
2. If the Display looks like Figure 12, The purge option is enabled.
3. Otherwise, press and hold the Mode switch until the Amps Line 1 field begins blinking 88 (more than 10 seconds). Release the switch so OPt appears. Reference Figure 11.
4. Press (and release) the Mode switch until PurG appears.
5. Press the On/Off switch until a Y appears, indicating Purge option is Active.
6. Return to system purge display by pressing the Mode switch repeatedly until the screen shown in Figure 12 is displayed. Purge will still be active.

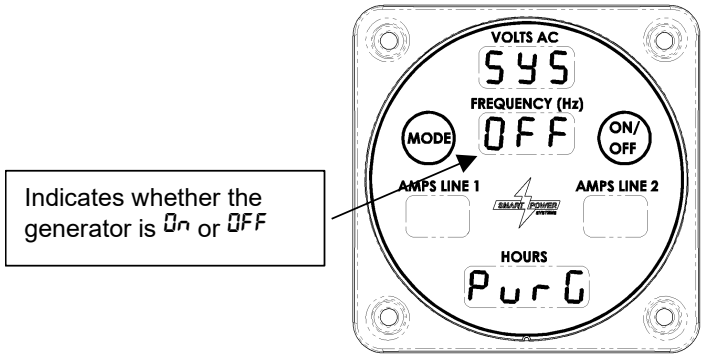

Figure 12 – Purge Option Display

j. Engage the Power Take-Off (PTO). (Note: Pump may sound rough for a few minutes due to entrapped air.) Make sure the Command & Control Center displays the string "OFF" as shown in figure 12, press the On/Off switch to turn the generator off, if needed.

k. Check for hydraulic fluid leaks, all hose connections must be tight. **Monitor the hydraulic fluid level, adding fluid as needed to keep the level in the sight gauge full**.

10. Prior to applying full load, and after the oil temperature is above 120°F verify proper operation of the cooler fan by feeling for airflow being pulled into the cooler and pushed out by the fan. If the air is not being pulled through the cooler face, contact Smart Power Systems® at (231) 832-5525 for more information. Also verify that the air passing through the cooler and the fan is not restricted.

WARNING:

The SPS Model ER-6.2, ER-8, ER-10 and ER-110 have been pre-set at the factory to provide correct frequency and voltage. No pump adjustment is required. If it appears the pump needs to be adjusted, contact Smart Power Systems® at (231) 832-5525 before proceeding. Damage to generator from improper pump adjustment will void the system's warranty.

Improper ventilation will result in system overheating, reduced performance and possible damage to the system and/or cause personal injury. If the system is installed such that improper ventilation exists, the system's warranty will be voided.

11. Set “auto-start” option.

If the auto-start option is enabled, the generator will begin generating electricity whenever the PTO is engaged. If the auto-start option is disabled, the generator will not output electricity after PTO engagement until the “on/off” switch is pressed. Select the auto-start function by performing the following steps:

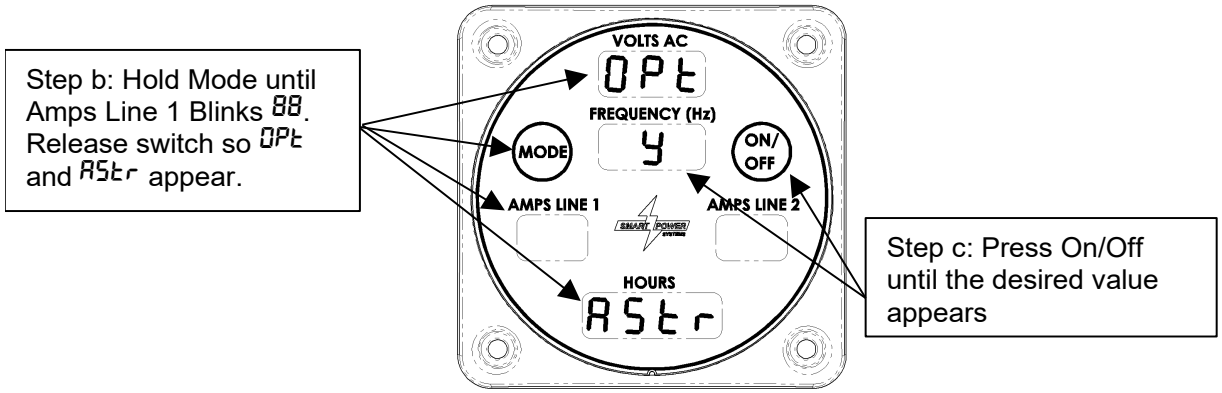

Figure 13 – Auto-start Selection Display

Enabling Auto-Start Option

a. If the Command & Control Center is dark, press the Mode switch to put the Command & Control Center into Normal mode.

b. Press and hold the Mode switch until the Amps Line 1 field begins blinking 88 (more than 10 seconds). Release the switch so OPt and AStr appear. Reference Figure 13.

c. Press the On/Off switch until the desired value appears. A Y means Auto-Start is enabled, an n means Auto-Start is disabled.

d. Return to Normal mode by pressing Mode.

Operation

1. The Command & Control Center will show the generator's output voltage, frequency, current, and system run time whenever the Command & Control Center is in Normal mode. To access Normal mode, press the Mode switch repeatedly until the correct information is displayed (reference Figure 14).

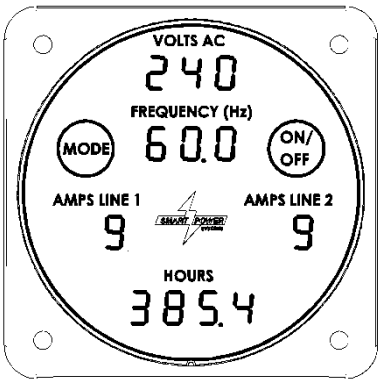

Figure 14 – Command & Control Center in normal mode

2. The PTO driving the SPS hydraulic pump must be engaged for the system to generate electricity.

3. The Command & Control Center is equipped with two Smart Touch® switches, labeled "Mode" and "On/Off" respectively. These switches do not require pressure to be activated but instead sense the presence or absence of your fingertip. The decimal points in the "Amps Line 1" and "Amps Line 2" fields of the Command & Control Center are used to indicate the status of the Mode and On/Off switches respectively (reference Figure 15).

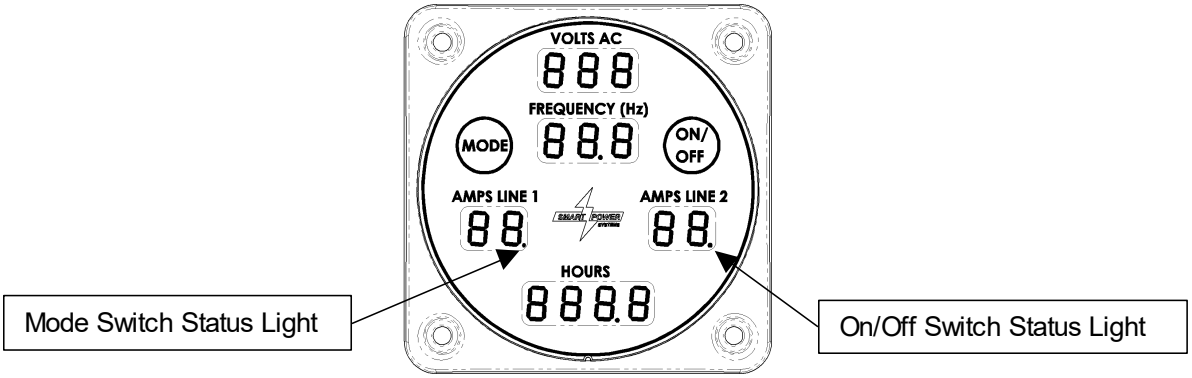

Figure 15 – Switch Status Lights

Normally, the status lights will be off. When a switch is pressed, the corresponding light will be illuminated. When a status light is flashing, the corresponding switch is calibrating, and the switch should not be pressed. The system controller will ignore the switch while it is calibrating.

4. If the system controller is powered on, but the generator is not running and no buttons are pressed for 5 minutes, the system will enter Quiescent mode. In Quiescent mode all displays are blank to conserve power. To return to Normal mode from Quiescent mode, press the Mode switch.

5. Whenever the PTO is engaged and the system controller is in Normal or Quiescent mode, the generator can be switched from an “off” state to an “on” state, and vise-versa, by pressing the “on/off” switch on the Command & Control Center. If the PTO is not engaged, the hydraulic pressure is too low, the following screen will be displayed (Reference Figure 16):

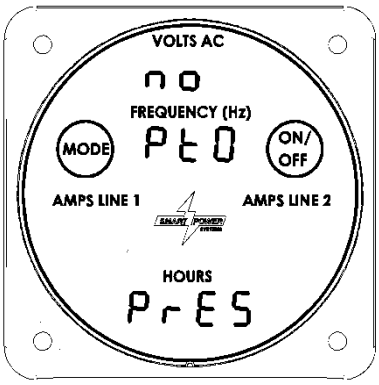

Figure 16 – Low Hydraulic Pressure Display

If the generator enclosure cover is not closed when the “on/off” switch is pressed, the generator and fan will **NOT** run, and the following screen will be displayed:

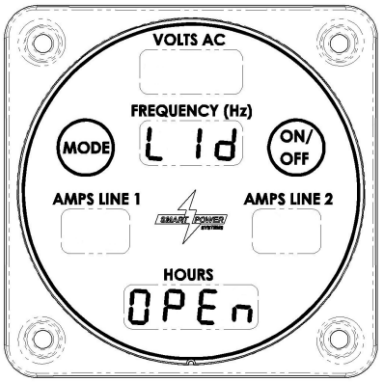

Figure 17 – Lid Open Display

6. Additional Information provided by the Command & Control Center:

   a. When the Command & Control Center is in Normal mode, pressing the Mode switch once will display the oil temperature as in Figure 18, below.

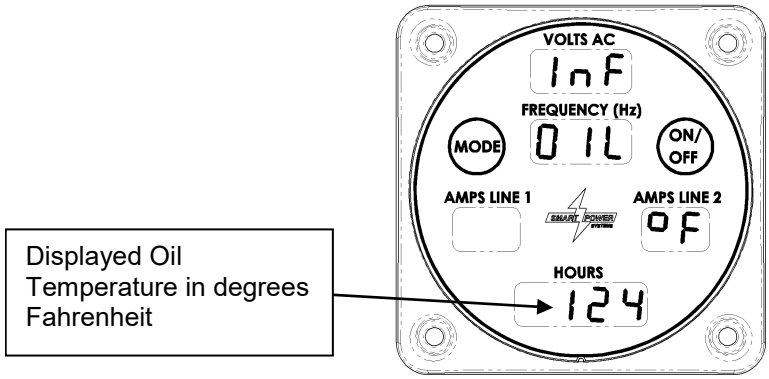

Figure 18 – System Temperature Display

   b. Inlet pressure to the generator will be displayed next to the hours field by pressing the Mode switch a second time as seen in Figure 19.

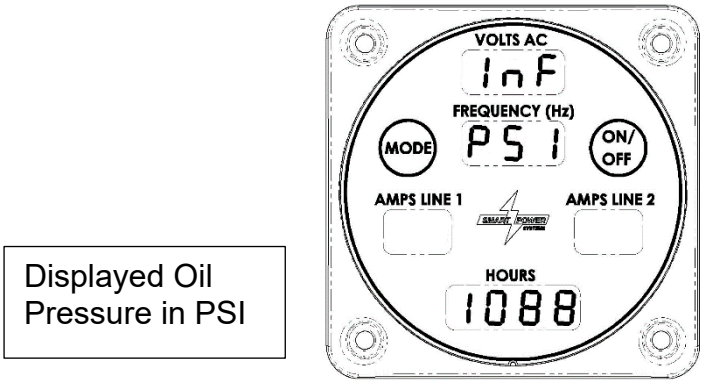

Figure 19 – System Inlet Pressure Display

   c. DC supply voltage as measured by the generator system controller will be displayed next to the hours field by pressing the Mode switch a third time as seen in Figure 20.

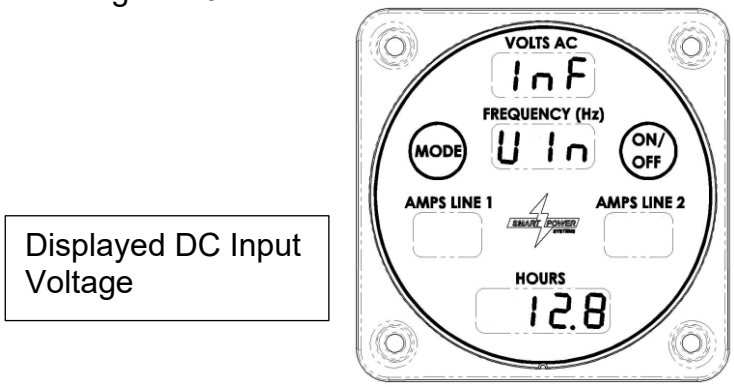

Figure 20 – DC Input Voltage Display

d. Pressing the Mode switch a fourth time will cause the amount of time since the oil filter was last changed to be displayed in the hours field as seen in Figure 21.

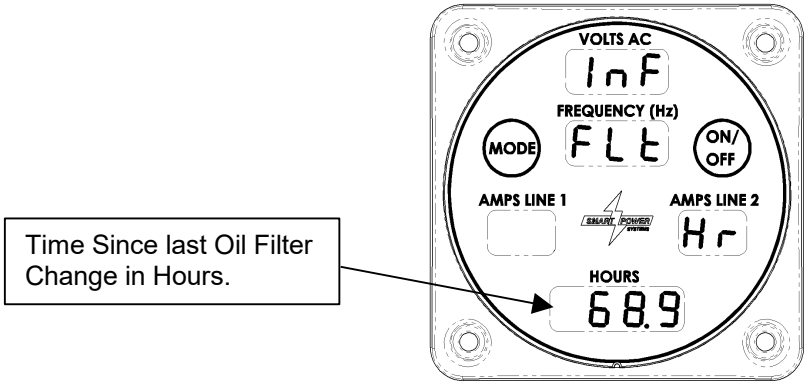

Figure 21 – Oil Filter Run Time Display

e. When the Command & Control Center is in Normal mode, pressing the Mode switch five times will cause the configuration of the generator system controller to be displayed. The "Er" indicates the controller is configured to run an enclosed generator, and the number displayed corresponds to the maximum power output of the generator in kilowatts (reference Figure 22).

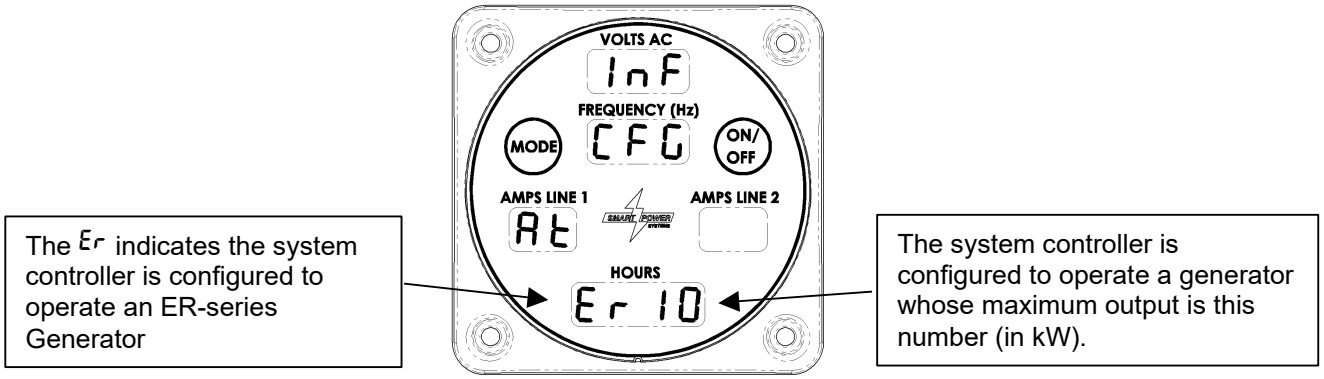

Figure 22 – Example Configuration Display

f. If there are no active faults, pressing the Mode switch once more will return the Command & Control Center to its normal mode. If there are active faults, they will be displayed in succession, one each time you press the Mode switch.

See Diagnostics in the trouble shooting section for more information on faults.

9. Alarms, Shutdowns and Overrides provided by the Command and Control Center

The following is a list of diagnostic faults displayed by the Command and Control Center that will cause an automatic shutdown of the system (see the Diagnostic Faults section of this manual for a complete list of diagnostic faults.):

a. OIL HOt <Temp>. If the system measures a hydraulic oil temperature that exceeds 185°F, the system will begin displaying an alarm. If the system measures a hydraulic oil temperature that exceeds 195°F, the generator will automatically shut down in 30 minutes unless the shutdown is overridden. If the temperature of the hydraulic oil reaches 220°F, the system will immediately shut down (above 220°F the shutdown cannot be overridden).

b. ULU **<x>** SHrt. The control valve feedback is invalid, indicating the system is not under control. The valve indicated in the frequency window may be shorted.

c. ULU **<x>** OPEn. The control valve feedback is invalid, indicating the system is not under control. The valve indicated in the frequency window may be open. This fault must be acknowledged on the Command & Control Center using the On/Off button.

d. OIL LO. If the system detects an insufficient level of hydraulic fluid in the reservoir, it will begin displaying an alarm. The generator will automatically be shut down in 30 minutes unless the shutdown is overridden, or the fault is cleared by adding sufficient fluid.

e. HI CUrr. If the system measures a continuous current draw exceeding the generator's maximum output rating, the generator will automatically shut down in 30 minutes unless the shutdown is overridden.

f. bAd UoLt. If the system measures an output voltage that is too low or too high the generator will automatically shut down in 30 minutes unless the shutdown is overridden.

g. bAd tSnS. If the system detects a faulty temperature sensor, the generator will automatically shut down in 30 minutes unless the shutdown is overridden.

h. OIL FILt. If the oil filter service warning is ignored, and the oil filter is not changed following the procedure outlined in the "Maintenance Instructions" section of this manual, the generator will automatically shut down in 30 minutes unless the shutdown is overridden.

WARNING:

Overriding an automatic system shutdown may result in permanent damage to the system and/or degrade the system's performance.

Overriding an automatic system shutdown may void warranty. The system's electronic controller records whenever an override function is performed. Always avoid overriding a shutdown if possible.

10. The following is an example of how an automatic shutdown can be overridden. This example describes how to override an OIL HOT shutdown, but the override procedure is the same for all the above listed diagnostic faults:

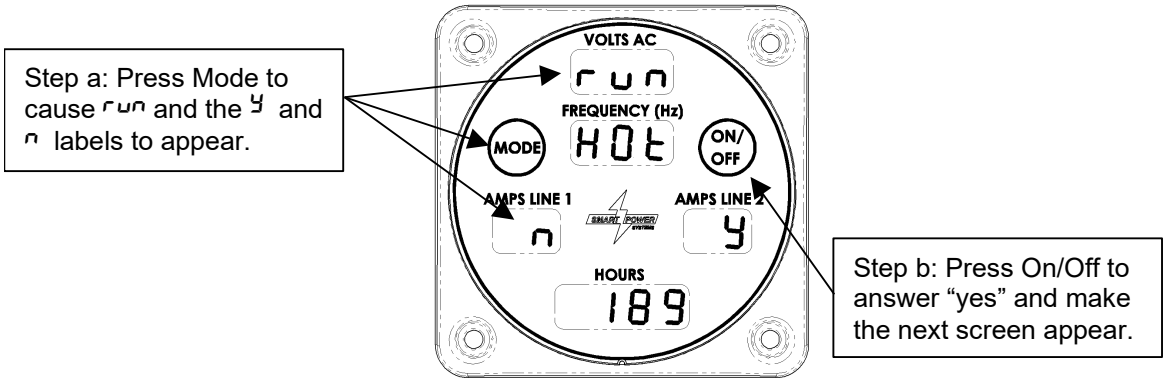

Figure 23 – Hot Oil Fault Override Display

a. From the Normal mode display, press Mode, as if you wanted to display the oil temperature. The screen shown in Figure 23 will be displayed instead, asking if you want to "Run hot." This screen will also be displayed if you attempt to start the generator with the condition present.

b. Note the y and n labels below the Mode and On/Off switches. Press the On/Off switch to answer "yes" and proceed to the next screen or press Mode to answer "no" and proceed to the oil temperature display.

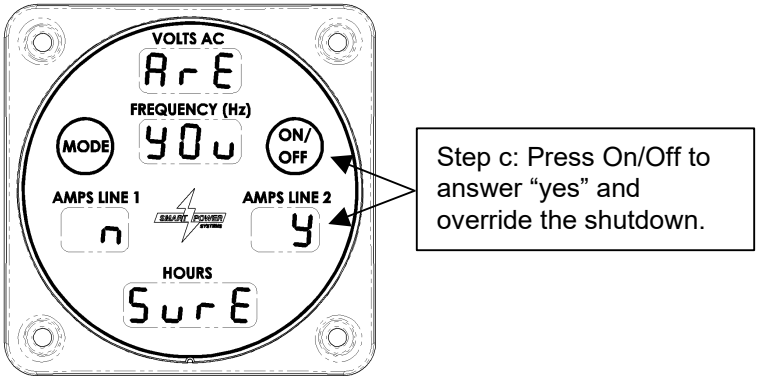

Figure 24 – Hot Oil Override Confirmation Display

c. If your answer was "yes" in the previous step, the confirmation screen shown in Figure 24 will be displayed. Again, note the y and n labels below the Mode and On/Off switches. Press the On/Off switch to answer "yes" and override the shutdown. Press Mode to answer "no" and proceed to the oil temperature display.

Note: This procedure works for oil temperatures above 195°F. If you override the system, and command it to operate at oil temperatures above 195°F, the system output power may degrade, and **you will void the system's warranty.**

Optional J1939 Interface

1. The integrated SAE J1939 communication interface makes it possible to connect the generator's ECU to a vehicle multiplexing system for monitoring, control, and real time diagnostic information. Everything available via the Command and Control Center, and more, is available through the J1939 interface.
2. Multiplex developers who have worked with Smart Power Systems® will be able to supply database information and screen layouts to their OEM customers. Potential display screens and available information can be seen in Figures 22 and 23, below. For independent development please contact Smart Power Systems® at (231) 832 5525 for J1939 message details.

Figure 25 – J1939 Multiplex Monitoring

Figure 26 – J1939 Multiplex Control and Diagnostic Information

3. Generator systems equipped with the SAE J1939 communication interface have a three-pin harness as shown above in the interface drawing, Figure 8. The connector pinout can be found in the electrical schematic in Figure 2. A 120 Ohm termination must be added if the generator's ECU is a single network node.

Special Operating Instructions

Cold Weather Procedure:

It is strongly recommended that the generator PTO be engaged prior to leaving a heated garage or fire station in cold weather. The system will generate enough heat to keep its hydraulic fluid viscosity low enough for proper operation, in all but the most extremes of low ambient air temperatures.

If the generator system is "started" when the hydraulic oil temperature is below 40°F, the following message will be displayed on the Command & Control Center (reference Figure 27):

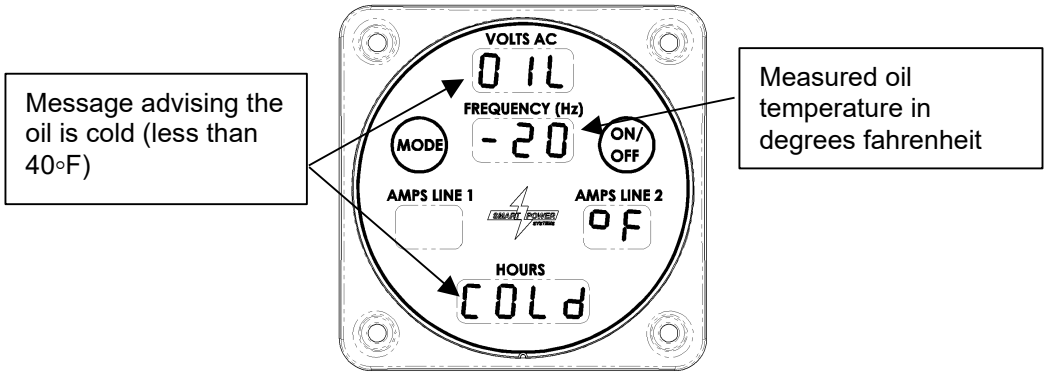

Figure 27 – Display When Operating with Cold Hydraulic Fluid

Operating Modes when the system START button is activated (or when the system is in "auto-start"):

- When the meter displays hydraulic oil temperatures below 20°F, the hydraulic system will bypass the generator motor, and the generator will not produce power. This mode warms the hydraulic oil.

- When the meter displays hydraulic oil temperatures between 20° and 40°F, the generator rotor will turn at a reduced RPM, and the generator will not produce power. This warms the hydraulic oil to 40°F.

- When the meter displays hydraulic oil temperatures that exceed 40°F, the system will then commence full power generating operations.

Maintenance Instructions

WARNING:

Do not perform maintenance while system is running.

1. Perform regular, periodic checks to verify:

    a. The cooler, the cooler fan and generator vents are not plugged by debris.
    b. There are no fluid leaks within the framework of the generator, along the hoses, or at the pump.
    c. The hoses are not cut, chafed, bulged or kinked.
    d. That no electrical connections are loose.
    e. That the hydraulic fluid level in the reservoir is between ½ to ¾ full in the sight gage and the hydraulic fluid is clean and of normal color.
    f. That the bolts mounting the pump to the PTO are not loose.
    g. If the hydraulic fluid appears dirty or black in the reservoir sight gage, replace the fluid and filter immediately. Also, if the hydraulic fluid sustains a temperature over 185° F, replace the fluid immediately. Oxidation can occur naturally over time and can be accelerated with over temperature operation, affecting generator output. Always change the filter when the hydraulic fluid is changed.

WARNING:

When adding or replacing hydraulic fluid, always use clean, new hydraulic fluid.

Do not power wash the generator. Doing so will void the system's warranty.

Do not allow liquid to enter the generator.

If the outside of the generator requires cleaning, wipe surface with a damp cloth.

Clean the Command and Control Center using soap and water with a soft cloth only. Improper cleaning, handling and use that may scratch, gouge, chip, fade or otherwise damage the metallic coating and display surfaces are not covered under the device warranty.

2. Replace the oil filter after every 250 hours of operation, or every three (3) years (whichever comes first). Use fresh hydraulic fluid and one of the following filters:

    Hydac 0080 MA010 P
    Purolator 20101
    Fram P-1653-A (10 Micron 8 GPM)
    WIX 51551 (10 Micron 8 GPM)

    Lubricate the oil filter gasket with Hydraulic Oil before installation to permit proper sealing of the filter.

WARNING:

Do not bypass the filter or alter filtration plumbing in any way. Doing so will void the system's warranty.

3. The system controller automatically records the time from the previous filter change. The hours since the previous filter change can be accessed using the Command & Control Center by pressing the Mode switch until the following screen appears (reference Figure 28):

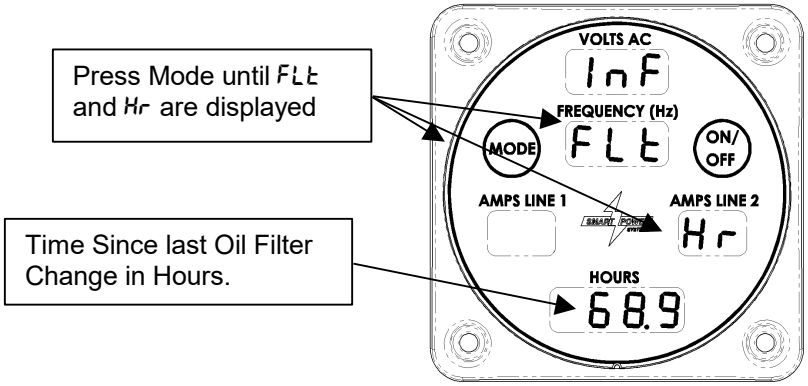

Figure 28 – Oil Filter Runtime Display

4. The Command & Control Center will flash a fault when 250 hours have passed since the previous filter change. After replacing the filter, this fault can be removed from the Command & Control Center, and the filter run time can be reset by performing the following steps:

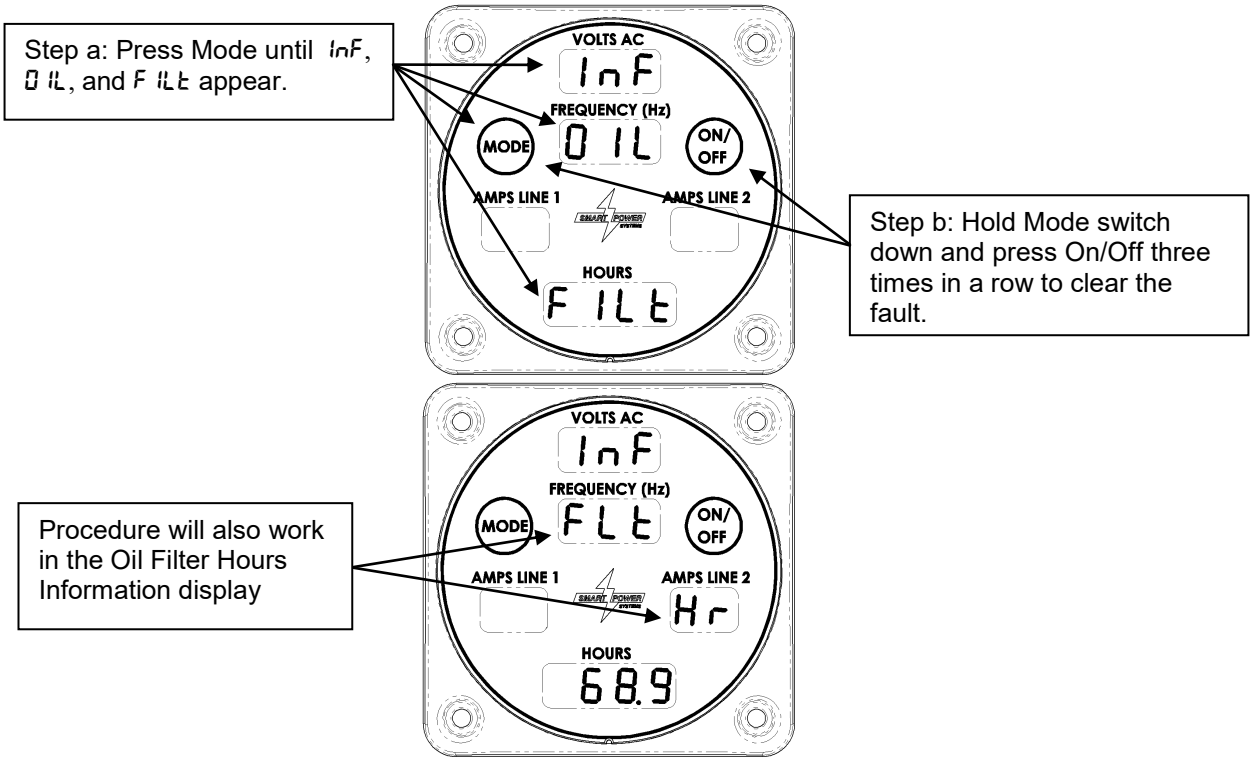

Figure 29 – Oil Filter Service Warning Display

a. Press the Mode switch repeatedly until one of the screens shown in Figure 29 appears.
b. While holding the Mode switch down, press and release the On/Off switch three times in succession, then release the Mode switch. The Oil Filter Fault display will be removed and replaced by another screen. The fault has been cleared and the timer reset.
c. When the fault has been cleared, <u>the system automatically enters purge mode</u> (Figure 12) to purge any entrapped air from the hydraulic lines per installation section 9. Turn off the main power breaker during purge (Mounted inside generator enclosure as in Figure 10.) While purging, <u>the system will not produce usable electrical power</u>.

Troubleshooting Guide

Diagnostic:

The Command & Control Center will display certain faults that can assist a service technician in trouble shooting a problem with the generator system. When these faults occur, the fault message will periodically flash on the Command & Control Center, interrupting the normal display. Reference Figure 30 for an example of an over-current fault.

The faults can also be accessed by repeatedly pressing the mode switch. After displaying the oil temperature, oil filter time, and configuration, the next display will be the first active fault. Each time the Mode switch is pressed, the next fault will be displayed. When there are no more faults to display, the Command & Control Center will return to Normal mode.

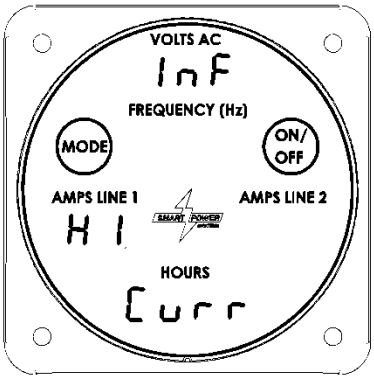

Figure 30 – Line 1 High Current Fault Display

Diagnostic Faults:

The following is a list of the diagnostic faults as displayed on the Command & Control Center, with a brief explanation of each.

CCC Display	Class	Description
ULU <x> SHrt	Alarm	The control valve feedback is invalid, indicating the system is not under control. The valve indicated in the "frequency" window may be shorted.
ULU <x> oPEn	Alarm	The control valve feedback is invalid, indicating the system is not under control. The valve coil indicated in the "frequency" window may be open.
HI cUrr	Alarm	Overcurrent condition. The line in which the overcurrent condition exists is indicated by the location of the string: If in the "Amps Line 1" field, the overcurrent is in line 1; If in the "Amps Line 2" field, the overcurrent is in line 2.
bAd UoLt	Override	Voltage Sensor Fault. The indicated voltage may be incorrect, or not under control.
cAL UoLt	Service Warning	The voltage lines are perceived to need re-calibration
HI PrESS	Alarm	Oil pressure is too high (PSI rating dependent on kW rating)
bAd PrESS	Service Warning	Pressure transducer signal is out of normal operating range and requires service/replacement. May cause generator to not operate.
Lo FLo	Service Warning	Generator output frequency not able to be controlled high enough. Pump adjustment or cleaning is likely needed.
Add OIL LO	Override	Reservoir oil level low. Add oil through filler cap to clear. Check for oil leaks.
OIL Hot <Temp>	Alarm	Oil temperature is getting too high (>185° F). Measured Temperature in the "Hours" field
OIL Hot <Temp>	Override	Oil Temperature is too high (>195° F).
OIL Hot <Temp>	Shutdown	Oil Temperature dangerous (>220° F).
bAd Ind	Alarm	Indicator Light Ground Fault. The indicator light may not function properly.
bAd tSnS	Override	Temperature Sensor Fault. The indicated oil temperature may be incorrect.
bAd ALrt	Alarm	Buzzer Ground Fault. The audible alert buzzer may not function properly.
bAd dISP	Alarm	The Command & Control Center may not operate properly.
bAd dAtA	Service Warning	The Command & Control Center is not receiving proper communications and may not operate properly.
cHG OIL FILt	Service Warning/Override	Service Warning: Change oil
LS FAn	Alarm	Fan Short. The Fan may not operate properly.
FAn oPEn	Alarm	Fan perceived to be disconnected and may not operate properly.
Lo UIn	Alarm	VDC to the ECU below validated operational limits. Potential for undesired results or damage exists.
HI UIn	Alarm	VDC to the ECU above validated operational limits. Potential for undesired results or damage exists.

Table 2

Note: The fault "Classes" are defined in the table below:

Class	Meaning
Service Warning	Normal maintenance needs to take place.
Alarm	A condition requires the immediate attention of the operator.
Shutdown	A condition causes the immediate shutdown of the generator.
Override	A condition that will cause the generator to be shut down in 30 minutes unless explicitly overridden by the operator.

Table 3

The complete list of faults, including conditions and times, may be found in Table 4, below.

SPS J1939 ECU FAULT TABLE						
Fault	**Mature Condition**	**Mature Time[1]**	**Demature Condition**	**Demature Time[1]**	**Shutdown**	**Shutdown Criteria**
Valve Open	Open circuit on valve control lines (valve is disconnected)	1 second	Repair open circuit (connect valve), Acknowledge Fault on CCC	1 second	No	Valve 1[2]
Valve Short	Short circuit on valve control lines	Instantaneous	Repair short circuit	10 seconds	Yes	Valve 1[2]
Temperature Sensor	Temperature sensor input line open (temperature sensor is disconnected)	1 second	Repair open circuit (connect temperature sensor)	1 second	Yes	Fault active for 30 minutes
Fan Output Open	Voltage and current measuements indicate open fan circuit	12 seconds	Repair open circuit (connect fan)	12 seconds	No	NA
Fan Output Short	Excessive fan current to ground	1 second	Repair short circuit / replace fan	1 second	No	NA
Over Temp 185	Oil temperature is greater than 185°F	1 second	Oil temperature is less than 185°F	1 second	No	NA
Over Temp 195	Oil temperature is greater than 195°F	1 second	Oil temperature is less than 195°F	1 second	Yes	30 minutes unless override
Over Temp 220	Oil temperature is greater than 220°F	1 second	Oil temperature is less than 220°F	1 second	Yes	Instantaneous
Under Temperature (Visual Only)	Oil temperature is less than 40°F	1 second	Oil temperature is greater than 40°F	1 second	No	Will not start below 40°F
Indicator Short	Indicator drive line is shorted to battery	1 second	Remove short to battery on indicator drive line	1 second	No	NA
Buzzer Short	Buzzer drive line is shorted to battery	1 second	Remove short to battery on buzzer drive line	1 second	No	NA
Output Voltage	Output AC voltage is outside ±10% of target voltage	1 minute	Output AC voltage is within ±10% of target voltage	1 minute	Yes	Fault active for 30 minutes
Load Imbalance[3]	Phase power is outside ±20% of power on other phases	30 second	Phase power is within ±20% of power on other phases	1 second	Yes	Fault active for 30 minutes
Over Current[4]	True power > Output kW rating	5 seconds	True Power < Output kW rating	5 seconds	No	NA
Phase A Over Current	Phase A current > 110% of rating	5 seconds	Phase A current < 110% of rating	5 seconds	No	NA
Phase B Over Current	Phase B current > 110% of rating	5 seconds	Phase B current < 110% of rating	5 seconds	No	NA
Phase C Over Current[3]	Phase C current > 110% of rating	5 seconds	Phase C current < 110% of rating	5 seconds	No	NA
Voltage Calibration	Unloaded line voltages > 15VAC from each other	5 seconds	Line voltages < 15 VAC from each other	5 seconds	No	NA
DC Input Voltage	DC voltage < 9 VDC or > 16 VDC	3 seconds	9 < VDC < 16	3 seconds	No	NA
High Pressure	Oil Pressure > calibrated value	3 seconds	Oil pressure < calibrated value	3 seconds	No	NA
Low Flow	Low output frequency and valve PID(s) out of control range	10 seconds	Frequency > 58 Hz and valve PID(s) in control range	10 seconds	No	NA
Bad Pressure	Pressure transducer signal is outside normal range (open or shorted)	Instantaneous	Transducer signal in normal range (.5 - 4.5VDC.)	Instantaneous	Yes	Instantaneous if open and running
No PTO pressure	Oil pressure is less than 100 psi (PTO is off)	50 ms	Oil pressure is greater than 100 psi (PTO is on)	50 ms	Yes	Instantaneous if running

Table 4 – J1939 ECU Fault Conditions

Notes:

(1) Times are representative.
(2) Where more than one proportional valve is used due to flow requirements.
(3) 3 phase generators only.
(4) For external field excitation generators. Power output will be limited to alternator maximum KVA rating via limited field current.
(5) CCC displays “bad data” after 1 minute loss of communication with ECU.

Hydraulic Problems:

1. Cavitation:

Cavitation is caused by trying to pump more fluid than is available at the pump inlet due to system restrictions. Pump cavitation sounds like "marbles" passing through the pump. Conditions frequently associated with cavitation are the following:

a. Too many restrictive fittings such as elbows and reducers on the pump inlet hose.
b. Tight bends or kinks in pump inlet hose and/or tubing.
c. Insufficient tray height above the pump, resulting in low head pressures.
d. Under sized pump inlet hose (minimum pump inlet hose size is 1").
e. Excessively long inlet hose (may be corrected by using larger hose).
f. Cold hydraulic fluid.
g. Incorrect oil weight for climate

Finding the cause and correcting it should stop cavitation.

Install a 0-25 psig gauge in line between inlet hose fitting and pump inlet port. Engage PTO. Operate genset with no load for twenty minutes to purge air out of the system. Observe the pressure reading. The pressure should always be positive. If the pressure is not positive, system repair/rework is required.

2. Aeration:

Aeration results from air being drawn into the system through leak paths or a low fluid condition. Aeration makes a "growling" sound and produces visible bubbles in the fluid stream and/or reservoir. Conditions frequently associated with aeration are the following:

a. Air leaks in the pump inlet flow path.
b. Low fluid level allowing air to be drawn into the system.

Verify there are no air bubbles in the fluid by viewing inside the reservoir. If there are air bubbles, check fluid level, tighten all fittings, and look for cracked fittings or hose leaks on the pump inlet line. Replace any suspect parts and adjust fluid level.

After correcting any problems, again operate the generator twenty minutes to purge air out of the hydraulic fluid. Note that any bubbles seen in the reservoir indicate leakage in the pump inlet line.

3. **Differential Pressure:**

Differential pressure between the inlet pressure and the case pressure over 7 psig causes the piston shoes to lift off the swash plate. This occurs due to the excessive lower pressure created on the fill (down) stroke of the piston. When the swash plate begins its upstroke, with pump rotation, it comes back into contact with the piston shoe, creating chatter.

NOTE: This is NOT NORMAL. The piston shoes should always remain in contact with the swash plate. The causes of and correction for this problem are the same as for cavitation above.

With the pressure gauge still installed in the suction line at the pump inlet port, install a second gauge (0-50 psig pressure gauge) in the case drain line at the pump case port. Next, engage the PTO and operate the genset with no load for twenty minutes to purge air out of the fluid. Note both gauge readings. If the differential pressure at the case is greater than 7 psig, the suction side plumbing will require evaluation.

Note the following pressure measurements!

Inlet pressures: Should always be positive.

Outlet pressure: Approximately 500 psig with no load on the generator. **Note:** If the gauge is fluctuating, record limits.

Case drain pressure to inlet pressure differential: The difference between pump inlet pressure and case drain pressure should not exceed 7 psig. Pump inlet pressure minus case drain pressure should never be less than 7 psig.

Verify the installation of the following hydraulic generator hose diameters:

a. Inlet hose (suction) on hydraulic pump (attaches to Port “S” on back of pump): 1 inch
b. Outlet hose (pressure) on hydraulic pump (attaches to Port “B” on back of pump): 1/2 inch
c. Case drain to hydraulic pump (attaches to Port “L” top side, mid-length of pump): 5/8 inch

Note: The hose diameter appears in print along the length of the hose.

System Overheating:

System overheating may be caused by re-circulation of hot air through oil cooler, dirty or obstructed oil cooler fins, restricted hydraulic fluid flow, excessive generator load, restricted airflow, previously overheated (old) fluid, non-functional fan, or improperly adjusted pump.

a. Check the oil cooler fins for debris or damage. Clean and/or replace cooler.
b. Verify that the generator load is not excessive.
c. Verify that there is proper ventilation.
d. Verify that the DC fan motor is operating properly.
e. Verify that warm air from the fan outlet is not being re-circulated through the cooler.
f. Check the hydraulic fluid to see if it is black or darkened. This indicates overheating or aging. Drain and flush the system.
g. Fill with new, clean hydraulic fluid.
h. Adjust pump, if necessary, only after contacting Smart Power Systems® at (231) 832-5525.

4. **Low Hydraulic Fluid Level In Reservoir:**

Low hydraulic fluid level in reservoir can be caused by leaking fittings, hoses, or pipes.

a. Check all the fittings for leaks. Tighten any loose fittings that are found (but do not over-tighten).
b. Replace defective fittings.
c. Check all tubing for leaks. Repair or replace, as necessary.

Electrical Problems

1. **No Output Voltage:**

   a. No output voltage may be caused by excessive current draw opening the circuit breakers. (The circuit breakers can be found mounted on the generator wiring enclosure.) Remove all electrical loads from the generator and reset breaker(s). Re-engage electrical load in increments. If possible, monitor current draw with the Command & Control Center to determine which portion of the load is causing the breaker to open.

   b. The PTO is faulty. Verify that the drive shaft that links the pump to the hydraulic pump is spinning when the PTO is engaged. If the shaft is not turning, the probable cause of the failure is a non-functional PTO. Contact the PTO manufacturer or qualified representative for further information.

   c. The generator's system controller has lost power. The Command & Control Center would stay dark even after the mode and/or on/off switch is pressed. Verify that the vehicle +12V supply has both +12 volts and ground. If 12 volts are not available check the vehicle for a blown fuse or a loose/open electrical connection.

   d. The stator field may be shorted or open. Disconnect wires 2 and 3 from the terminal strip located in the generator wiring enclosure. Remove black and green jumper wires from terminal 3 of terminal strip. Remove Breaker and wires 1 and 4 from the Line Side of the breaker. Make resistance measurements. The resistance between wires 1 and 2, and wires 3 and 4 should be between essentially 0 ohms. Resistance between wires 1 and 4 should be infinite. Contact Smart Power Systems® at (231) 832-5525 if any problems are found.

WARNING:

Do not attempt to measure stator field resistance while the system is operating. Electrical shock may occur.

   e. The exciter field may be shorted or open. With a flashlight, check the generator windings visible through the ventilation slots. If the windings appear burnt in any area, the generator must be replaced. If the windings are not burnt, disconnect the exciter field from the field capacitor. Measure the resistance of the exciter field using an ohmmeter. The resistance of the exciter field should be between .5 ohms and 1.2 ohms. Contact Smart Power Systems® at (231) 832-5525 if the resistance is outside this range.

WARNING:

Do not attempt to measure the exciter field resistance while the system is operating. Electrical shock may occur.

f. Exciter field capacitors may be faulty. Disconnect the exciter field from the field capacitors. Using a screwdriver, short leads of capacitors together to discharge capacitor. Measure capacitance against its printed rating using a capacitance meter. Note that the capacitors must be disconnected from the generator and each other (if there are more than one) before measuring.

WARNING:

Do not attempt to test the field capacitor with the system running. Electrical shock may occur.

g. The generator drive motor or coupling is faulty. Observe the generator while the system is engaged. If the coupling is not turning, or if it is turning but the generator is not, one or more of the coupling components may be damaged and must be replaced. Also, verify that the coupling halves are mating. If the coupling halves are not mating, remove the hydraulic motor from the generator to inspect coupling and the rubber insert between the coupling halves. Replace components as necessary, reposition, and tighten coupling setscrew so both halves of the coupling are mating correctly.

h. The pump is faulty. If no faults are found in steps a. through g., the problem is likely to be a non-functional pump. Contact Smart Power Systems® at (231) 832-5525 for further instructions.

2. **Output voltage exceeds 260 volts or falls below 220 volts AC on a 240 volt line:**

   a. Verify that the hydraulic system is not overheating by viewing the temperature as displayed by the Command & Control Center. The temperature should not exceed 185° F. If the temperature is greater than 185° F, follow instructions for system overheating (see hydraulic problems).

   b. The hydraulic pump speed may be too low. Verify that the hydraulic pump speed is in the required range (see Table 1). Pump speed can be calculated by multiplying the engine RPM by the PTO ratio. Adjust the engine speed or PTO ratio if necessary.

   c. The generator speed may be incorrect. The generator output should be between 59-62 Hz. If it is not, contact Smart Power Systems® at (231) 832-5525 for further instructions.

   d. If the problem is not detected by performing steps a. through c., contact Smart Power Systems®.

3. **Generator Noise:**

   Generator noise can be caused by defective generator bearings or a faulty generator/hydraulic motor coupling.

   a. Contact Smart Power Systems® if bearings need replacement.

   b. Check the generator/hydraulic motor coupling and replace it if necessary.

   If problems occur other than those listed call **Smart Power Systems® (231) 832-5525** for additional assistance.

Pump Adjustment

WARNING:

The SPS Electronic Controlled Generators have been pre-set at the factory to provide correct frequency and voltage, no pump adjustments are required. If it appears the pump needs to be adjusted, contact SPS at (231) 832-5525 before proceeding. Damage to the generator from improper pump adjustments will void the system's warranty.

To prevent permanent, un-repairable damage to the generator, never adjust the hydraulic pump so the generator's output frequency exceeds 65 Hz.

Make adjustments to the hydraulic pump flow control with all electrical loads disconnected from generator.

Never adjust the pump's pressure control.

Reasons for adjusting the pump:

1. Generated output frequency is "too low." Verify output frequency when the vehicle is in fast idle and oil temperature is below 160°F. If the frequency drops below 59Hz, the pump output flow may need to be increased.

2. The hydraulic system is running excessively hot: If the system's oil temperature is running above 160°F with an ambient air temperature of 80°F, the pump output flow may need to be decreased. Before making any adjustment, verify the system is getting adequate ventilation, the fan is operating, the oil cooler air passageways are not plugged and the hot air exiting the cooler is not being drawn back through the cooler. Operate system after correcting ventilation problems to validate whether the system still overheats prior to making pump adjustment.

   Note: The generator's output frequency cannot be decreased by adjusting the pump flow. If the generator output frequency is too high, contact SPS at (231) 832-5525 for further instructions.

Pump adjustment procedure:

1. Enable the generator Pump Set option.

The system controller has been designed to provide a Pump Set option. With this option applied, the generator will turn at the maximum speed allowed by the hydraulic pump to allow proper adjustment of the pump's flow.

The Pump Set option can be accessed by performing the following steps:

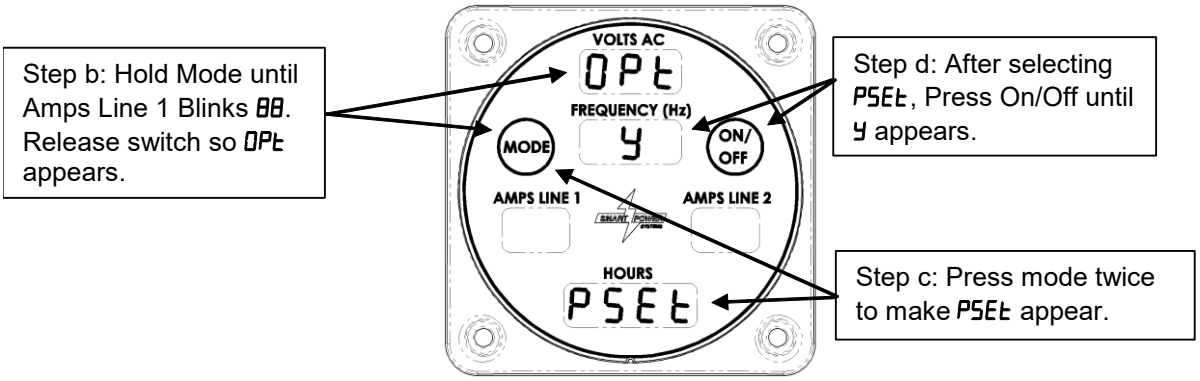

Figure 31 – Enabling Pump Set Option

a. If the Command & Control Center is dark, press the Mode button to put the Command & Control Center into Normal mode.

b. Press and hold the Mode button until the Amps Line 1 field blinks with 88 (more than 10 seconds). Release the button while the Amps Line 1 field is blinking to make OPt appear. Reference Figure 31.

c. Press (and release) the Mode button until PSEt appears.

d. Press the On/Off button until a Y appears, indicating Pump Set option is Active.

e. Return to Normal mode by pressing the Mode button until the screen shown in Figure 32 is displayed. Pump Set will still be active.

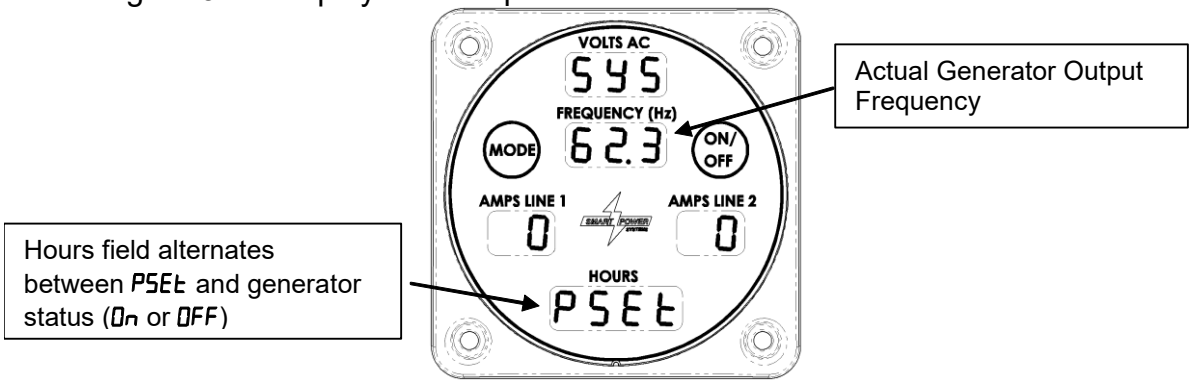

Figure 32 – Pump Set Display

2. Adjust pump compensator:

   a. Loosen and remove flow control cap. Reference Figure 33.

   b. Loosen the flow control pressure jam nut.

   c. While monitoring the generator's output voltage, slowly rotate the flow control set screw with a 3mm hex wrench. Adjust the flow control until the generator's output frequency is 64-65 Hz.

   d. While keeping the setscrew from rotating, with the hex wrench, re-tighten the jam nut.

   e. Replace and tighten the flow control cap.

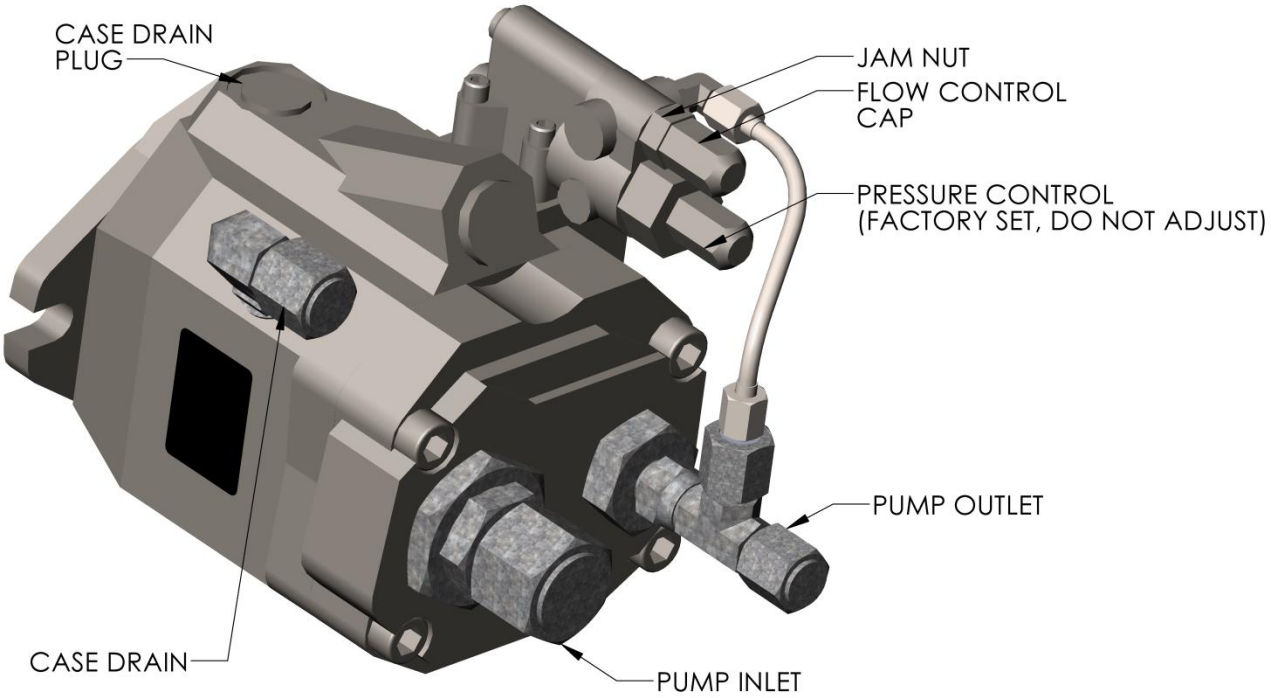

Figure 33 – Pump Assembly

3. Disable the generator Pump Set option.

After the pump has been properly adjusted, disable the Pump Set option by performing the following steps:

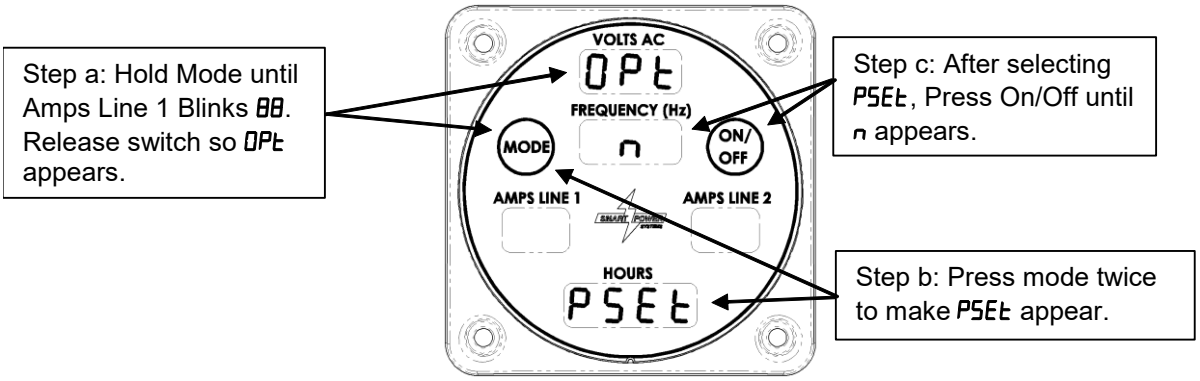

Figure 34 – Disabling Pump Set Option

a. Press and hold the Mode button until the Amps Line 1 field blinks with 88 (more than 10 seconds). Release the button while the Amps Line 1 field is blinking to make OPt appear. Reference Figure 34.

b. Press the Mode button until PSEt appears.

c. Press the On/Off button until an n appears, indicating Pump Set option is inactive.

d. Put system into Normal mode by pressing the Mode button.

NOTE:

For a complete copy of Manufacturer's Warranty please see our website at: www.smartpower.com/warranty

SPS Model Matrix

The following table includes all generator models this manual applies to:

PARENT P/N	DESCRIPTION	TRAY ASM P/N	PUMP ASM P/N	RANGE WR=WIDE RANGE	PUMP DISP. CC	SHAFT K=KEYED S=SPLINE D(STD)	SHAFT ROTATION R=CW (STD), L=CCW	MOTOR DISP. CC	POWER OUTPUT KILOWATT S5
1700006	GENERATOR, ER-6.2/45cc, R, SPL PUMP	8570006	8510010	WR	45	S	R	8	6.2
1701006	GENERATOR, ER-6.2/45cc, R, KEY PUMP	8570006	8510013	WR	45	K	R	8	6.2
1710006	GENERATOR, ER-6.2/45cc, L, SPL PUMP	8570006	8510004	WR	45	S	L	8	6.2
1711006	GENERATOR, ER-6.2/45cc, L, KEY PUMP	8570006	8510018	WR	45	K	L	8	6.2
1700008	GENERATOR, ER-8/45cc, R, SPL PUMP	8570008	8510010	WR	45	S	R	8	8
1701008	GENERATOR, ER-8/45cc, R, KEY PUMP	8570008	8510013	WR	45	K	R	8	8
1710008	GENERATOR, ER-8/45cc, L, SPL PUMP	8570008	8510004	WR	45	S	L	8	8
1711008	GENERATOR, ER-/45cc, L, KEY PUMP	8570008	8510018	WR	45	K	L	8	8
1700010	GERERATOR, ER-10, 45cc, R, SPL PUMP	8570010	8510001	Std.	45	S	R	11	10
1701010	GENERATOR, ER-10, 45cc, R, KEY PUMP	8570010	8510016	Std.	45	K	R	11	10
1710010	GENERATOR, ER-10, 45cc, L, SPL PUMP	8570010	8510002	Std.	45	S	L	11	10
1711010	GENERATOR, ER-10, 45cc, L, KEY PUMP	8570010	8510017	Std.	45	K	L	11	10
1700110	GENERATOR, ER-110/60cc, R, SPL PUMP	8570010	8510005	WR	60	S	R	11	10
1701110	GENERATOR, ER-110/60cc, R, KEY PUMP	8570010	8510019	WR	60	K	R	11	10
1710110	GENERATOR, ER-110/60cc, L, SPL PUMP	8570010	8510014	WR	60	S	L	11	10
1711110	GENERATOR, ER-110/60cc, L, KEY PUMP	8570010	8510021	WR	60	K	L	11	10
1711206	GENERATOR, ER-6.2, W/O PUMP	8570006	NONE	N/A	N/A	N/A	N/A	8	6.2
1711208	GENERATOR, ER-8, W/O PUMP	8570008	NONE	N/A	N/A	N/A	N/A	8	8
1711210	GENERATOR, ER-110, W/O PUMP	8570010	NONE	N/A	N/A	N/A	N/A	11	10

Table 5