

A.C. MODULAR GENERATOR SYSTEM

OWNERS MANUAL

MODEL#: LR-6.2, LR-8, and LR-MATRIX

9991032 Rev. O

Table of Contents

Section	Page
Disclaimer	5
Description of Product	6
System Specifications	9
Pre-Installation Guide	11
Installation Guide	14
Hose Installation Guidelines	18
The Auto-Start Option	24
Operation	25
Special Operating Instructions	35
Maintenance Instructions	37
Troubleshooting Guide	40

Doc. 9991032 Rev. O

ECO #16709

WARNING:

Do not install or operate the A.C. modular generator system OR LR MATRIX system without reading this entire manual.

The A.C. modular generator system will generate enough voltage to produce a fatal electrical shock. Do not perform any wiring installations or modifications while the system is operating. Never touch any live connections while the system is operating. Never operate the system with the generator wiring enclosure open. Install and secure cover before operating.

The installation of the Smart Power Systems® A.C. modular generator system is to be done in accordance with applicable sections in the National Fire Protection Association's document NFPA 1900, National Electrical Code®, and/or other applicable, recognized electrical codes and by a certified electrician.

Never directly expose the generator to any liquids, especially water, oil, or solvents. Electrical shock, fire and/or damage to the generator can occur and will void the system's warranty.

Smart Power Systems® hydraulic generators, as well as all generators, must be sufficiently protected from the environment to prevent damage to the stator. Smart Power Systems® stators go through a very important double-dip coating process prior to generator assembly, however, exposure to direct water sprays can cause the stator to electrically short. Generator damage and electrical shock can occur.

Caution should be taken during truck pressure washing, since water damage to the generator can occur if directly sprayed with high water pressure. Though Smart Power Systems® (SPS) generators are enclosed as much as possible, direct spray through the cooler, fan or open lid can still cause such damage.

Excessive road spray/salt can also cause an electrical short of the stator in the generator and can also shorten the generator's operating life. To prevent this type of damage, do not mount the system where it will be exposed to road spray.

Evidence of water damage, road spray/salt infiltration, and improper mounting will void the generator warranty.

Avoid physical contact with any of the components of the A.C. modular generator system during its operation or immediately after its use. The components of this system will get hot enough to cause burns and could ignite combustible materials.

Do not mount or locate anything inside of the framework. System overheating could result and void the system's warranty.

Never operate the system with leaks of any type. Clean up any hydraulic fluid that is spilled or has leaked out of the system. Hydraulic fluid is combustible, and ignition may occur.

With the exception of instructions within this manual, never modify or remove any of the components within the tray assembly.

Never modify or remove any of the components within the pump. This includes all fittings that were originally provided with the A.C. modular generator system.

Never attempt any adjustments or repairs to the A.C. modular generator system while the vehicle engine is running and the PTO is engaged.

Never operate the system with the hydraulic fluid exceeding 165°F. Above this temperature, hydraulic fluid can rapidly oxidize and deteriorate causing generator performance problems. Operating the system while the hydraulic fluid is above 165°F will void the system's warranty.

Hydraulic fluid is combustible and toxic. In the event of human contact with hydraulic fluid, generously flush body part (eyes, skin, etc.) with running water. Avoid inhalation of any oil mist or vapor. Do not ingest hydraulic fluid. In case of fire, use foam, dry chemical or carbon dioxide to extinguish flame.

Do not exceed the wattage rating of the generator. The generator may be permanently damaged, and the generator and hydraulic components may reach temperatures that could cause severe burns upon human contact with the components. Operating the generator system at wattages above the system's rating will void the system's warranty.

Disengage the system immediately if a hydraulic fluid leak is detected. Operation of the A.C. modular generator system with low fluid level will result in permanent damage to the hydraulic components in the system and will void the system's warranty.

Never attempt to operate the A.C. modular generator system or the XRT rescue tool pump without hydraulic fluid. ***FOR A.C. Modular Generator System ONLY:*** *Always maintain a fluid level between ½ to ¾ full in the sight plug.*

Do not attempt to operate the generator with the tray assembly top lid open. Do not tamper with the top lid interlock switch or the hydraulic fluid level sensor.

Operating the A.C. modular generator system in the presence of flammable vapors may result in an explosion.

Use only hoses that meet or exceed the minimum requirements specified in this manual. A ruptured hose can cause personal injury and/or damage to the generator system. Reference the XRT manual for the hose requirements for the XRT system.

Do not operate the system under electrical load with air in the hydraulic fluid (the system will make a growling sound). Do not allow anything to contact the hydraulic hoses that will cause a kink, pinch or chafing. The A.C. modular hydraulic system generates hydraulic pressures approaching 3600 psi. A ruptured hose may result from abrasion, discharging hot, high-pressure hydraulic fluid, which can cause serious personal injury, fire, and/or damage to the system.

Never remove the guards on the generator to expose the rotating fan or motor coupling. Personal injury will result if fingers, hair or loose clothing come in contact with rotating components.

Disclaimer

Although SPS has taken all reasonable care to ensure that the information contained in this installation manual (including without limitation, references, databases, resources, specifications, illustrations and instructions) was accurate in all material respects at the time of publication, SPS PROVIDES NO ASSURANCE, REPRESENTATION, WARRANTY OR GUARANTEE, expressed or implied (including third party liability), with regard to this manual, including without limiting the generality of the foregoing, with regard to its accuracy, reliability or completeness. The entire information contained in this installation manual is provided by SPS “AS IS” and without warranty of any kind, express or implied, including (but not limited to) any implied warranties of merchantability, fitness for any particular purpose, or non-infringement. Accordingly, by using the SPS unit and this information, you agree that, to the greatest extent permitted by law, SPS (including, without limitation, its subsidiaries, affiliates, agents, officers, directors, employees and insurers) is not and will not be liable for losses or damages resulting from this installation manual, its use, any information contained therein or the installation of the SPS unit.

This installation manual contains references to certain database and resources. As SPS has no control over these database and resources, you acknowledge and agree that SPS is not responsible or liable for any content, advertising, products, information or other materials on or available from such database or resources. You further acknowledge and agree that SPS shall not be responsible or liable, directly or indirectly, for any damage or loss caused or alleged to be caused by or in connection with use of or reliance on any such content, information goods or services available on or through any such database or resources. All product illustrations and specifications are based upon current information at the time of publication. Although descriptions are believed correct, complete accuracy cannot be guaranteed. SPS reserves the right to make changes of any kind at any time, without notice or obligation, in the information contained in this installation manual. All data and information of any kind are subject to change without notice and SPS assumes no obligation to update or correct information in this manual.

As some states do not allow the exclusion or limitation of liability for consequential or incidental damages, the limitation contained herein may not apply to you. In such states, SPS’ liability is limited to the greatest extent liability limitation is permitted by applicable law.

Description of Product

Hydraulic Generator Applications:

This heavy-duty electronically controlled generator system has been designed to meet the most demanding mobile applications. LR-Series systems provide 120/240 volt AC @ 5500(MATRIX), 6200, or 8000 watts depending on model.

If equipped, the XRT rescue tool pump is a dual level hydraulic pump designed to operate one or two hydraulic extrication tools at the same time.

How our System works:

A generator driven by a hydraulic motor delivers electrical power. The motor turns at 3600 RPM as controlled by the flow of hydraulic fluid through an electrically controlled proportional valve. The proportional valve is directly driven by the system controller. The gear pump delivers fluid to the proportional valve through the installer-supplied PTO mounted to the vehicle's transmission.

Heat generated in the hydraulic fluid as it passes through the various components in the system is cooled by a heat exchanger and fan. A filter removes impurities in the fluid. A venturi boost assembly monitors the volume of oil in the hydraulic circuit and feeds the system from the reservoir as needed.
NOTE: If equipped, the XRT rescue tool pump has a separate hydraulic circuit with its own filtering, cooling and control components. Refer to XRT user manual for installation.

Essentially, the only system maintenance required is periodic replacement of the hydraulic fluid filter and adding hydraulic fluid to maintain the fluid level (when the hydraulic fluid is between 70° and 80° F, it should be at the ¾ mark on the sight gauge).

Generator hydraulic and electrical schematics: see Figure 1 and Figure 2.

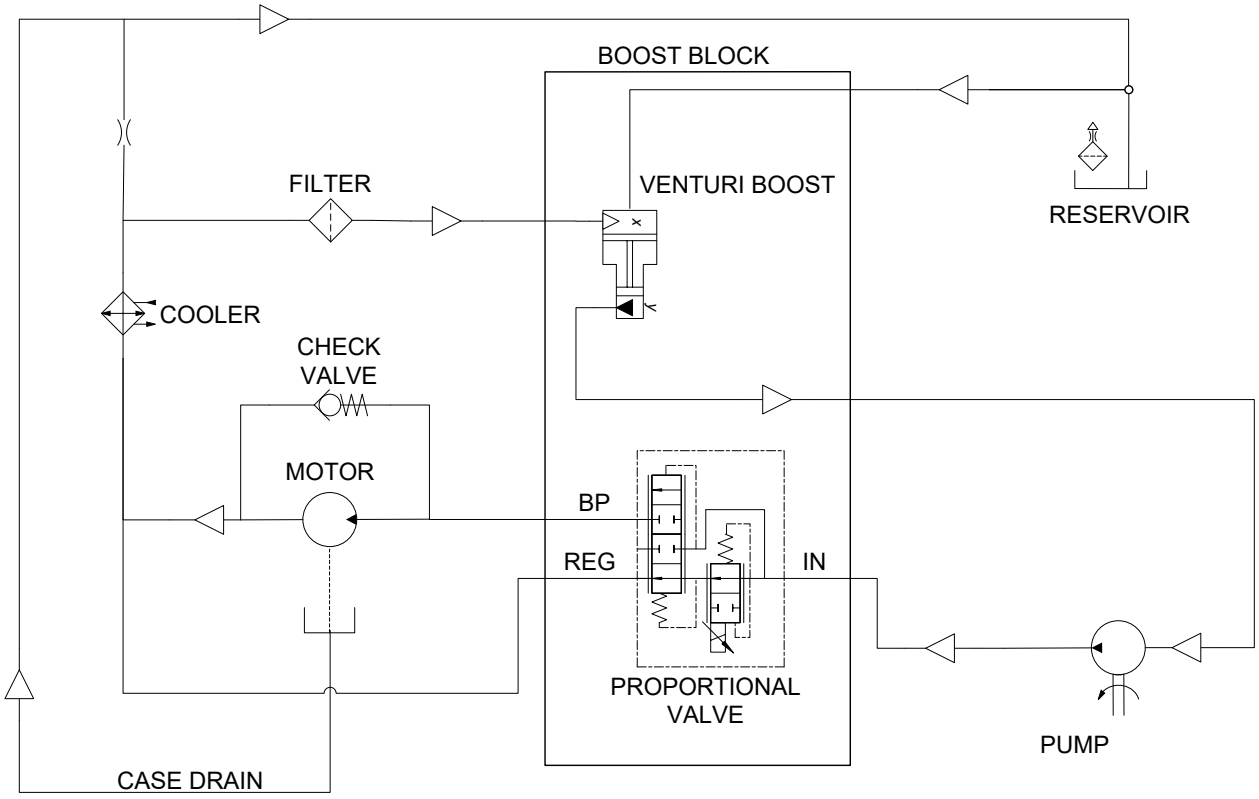

Figure 1 – Hydraulic Schematic

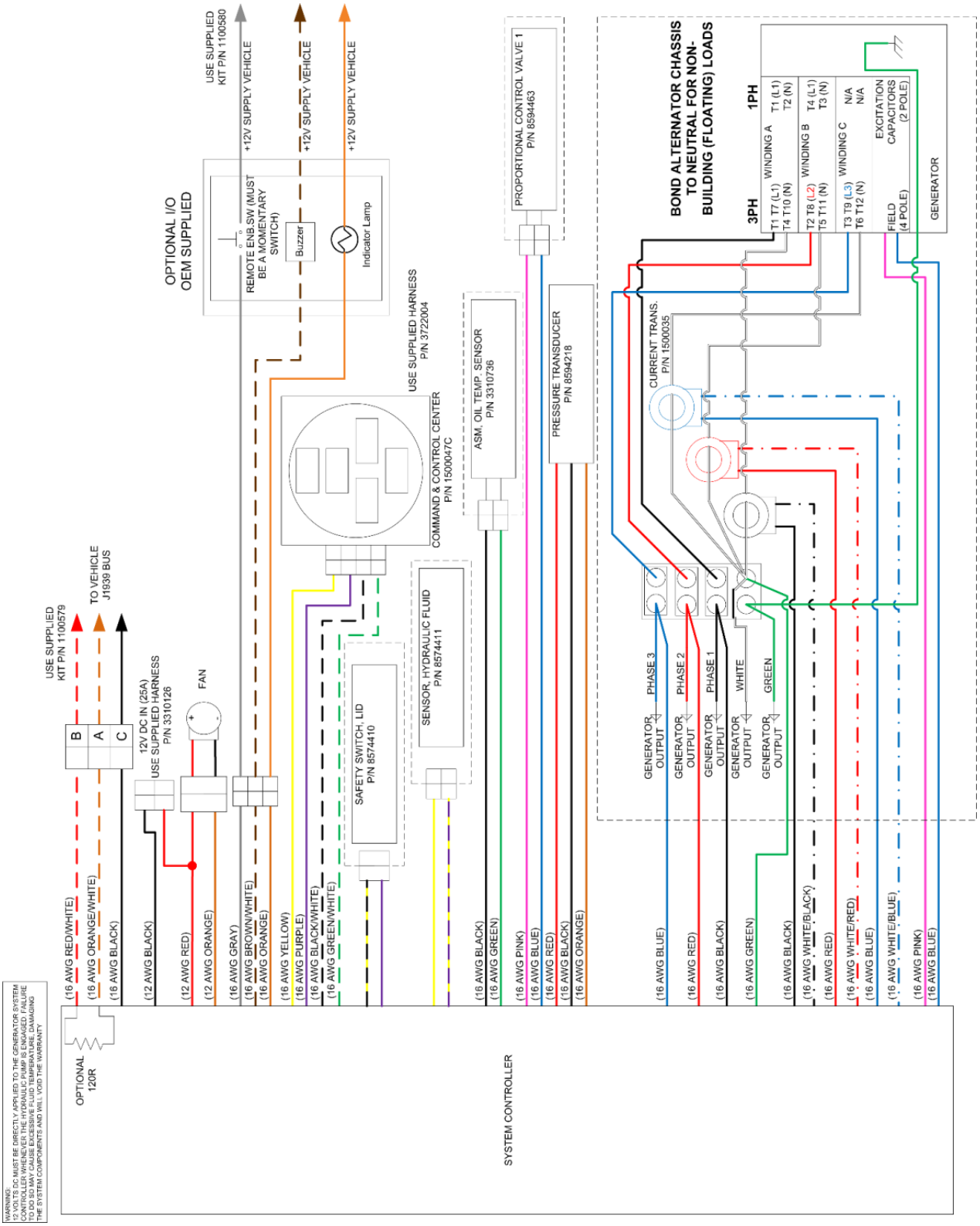

Figure 2 – Electrical Schematic

System Specifications

MODEL OF GENERATOR	LR-6.2 (60 Hz)	LR-8 (60 Hz)	MATRIX 5.5
Generator Type	AC Inductive	AC Inductive	AC Inductive
Speed	3600 RPM	3600 RPM	3600 RPM
Frequency	60 Hz	60 Hz	60 Hz
Voltage	240 VAC or 120/240 VAC	240 VAC or 120/240 VAC	240 VAC or 120/240 VAC
Amperage	52A @ 120 VAC or 26A @ 240 VAC	67A @ 120 VAC or 34A @ 240 VAC	46A @120 VAC or 23A @ 240VAC
Output Power	6.2 KW continuous 7.5 KW peak	8 KW continuous 9 KW peak	5.5 KW continuous 5.5KW Peak
Hydraulic Motor	Gear Type, 8cc	Gear Type, 8cc	Gear Type, 8cc
Maximum Speed	4000 RPM	4000 RPM	4000 RPM
Motor Shaft Size	0.626 inches 9 tooth spline	0.626 inches 9 tooth spline	0.626 inches 9 tooth spline
Hydraulic Pump	Gear Type, 23cc	Gear Type, 23cc	Gear Type, 21.13cc
Operating Pump Speed	**1500-1850 RPM** continuous duty	**1500-1850 RPM** continuous duty	**1800-1900 RPM** continuous duty
Engine Max Engage Speed	1300 RPM	1300 RPM	1500 RPM
Displacement	23cc per revolution	23cc per revolution	21.13cc per revolution
Continuous Pressure (Max)	3408 psi (235 bar)	3408 psi (235 bar)	2900 psi (207 bar)
Peak Pressure	3698 psi (255 bar)	3698 psi (255 bar)	2900 psi (207 bar)
Fan	12 Inch Pusher	12 Inch Pusher	12 Inch Pusher
Voltage	12 Volts DC	12 Volts DC	12 Volts DC
Amperage	22 Amps	22 Amps	22 Amps
Filter	10 Micron	10 Micron	10 Micron
Hydraulic Oil			
(recommended)	ISO 46 Hydraulic Oil	ISO 46 Hydraulic Oil	ISO 46 Hydraulic Oil
(Alternate)	DuraClean	DuraClean	DuraClean
Op. Temp. range	40° F to 175° F	40° F to 175° F	40° F to 175° F
Hoses	JIC STD	JIC STD	JIC STD
Pump Output	3600 psi, SAE	3600 psi, SAE	3600 psi, SAE
All Others	1250 psi, SAE	1250 psi, SAE	1250 psi, SAE

Table 1

MODEL OF GENERATOR	**LR-6.2 (60 Hz)**	**LR-8 (60 Hz)**	**LR-MATRIX 5.5**
Fittings	SAE	SAE	SAE
Dry Weight (without pump)	LR-6.2 235 lbs	LR-8 235 lbs	LR-5.5 235 lbs
Dimension of Tray Assy.	33 ¾" L x 15 ¾" W x 13 ¾" H (Including Reservoir)	33 ¾" L x 15 ¾" W x 13 ¾" H (Including Reservoir)	33 ¾" L x 15 ¾" W x 13 ¾" H (Including Reservoir)
Ambient Operating Temperature Range	0°F to 120°F	0°F to 120°F	0°F to 120°F

Table 1 (Cont.)

Pre-Installation Guide

WARNING:

Never exceed the maximum listed pump shaft speed from Table 1 when the PTO is engaged. Doing so will void the system's warranty.

Do not approach a running A.C. modular generator when wearing long, loose items such as hair, jewelry, ties, clothing, etc. Direct contact with a rotating drive shaft can cause serious personal injury and/or damage to the system.

1. Obtain the following hoses of the necessary length for the installation:

   a) Pump inlet hose: 1" SAE 100R1AT-16 hose (use Parker hose ends P/N 10643-16-16). Note: To ensure adequate hydraulic fluid flow rate to the pump, hose lengths exceeding 20 feet require a hose size at least one size larger than specified above. Please contact Smart Power Systems at (231) 832-5525 for technical support.

   b) Pump outlet hose: 1/2" SAE 100R9AT-8 rated to **4000 PSI** (use Parker hose ends, part number 10643-8-8). **Note:** For lengths greater that 20', It is NOT recommended to increase diameter.

   c) Pump case drain hose: 5/8" SAE 100R1AT-10 (use Parker hose ends, part number 10643-10-10).

The graph below is for inlet hoses. It shows pressure drops with different I.D. hoses and flow rates.

Note: Baseline data was collected with the hose at zero incline. Hydraulic pressure (PSI) will increase with elevation. See Note 3 below for additional information.

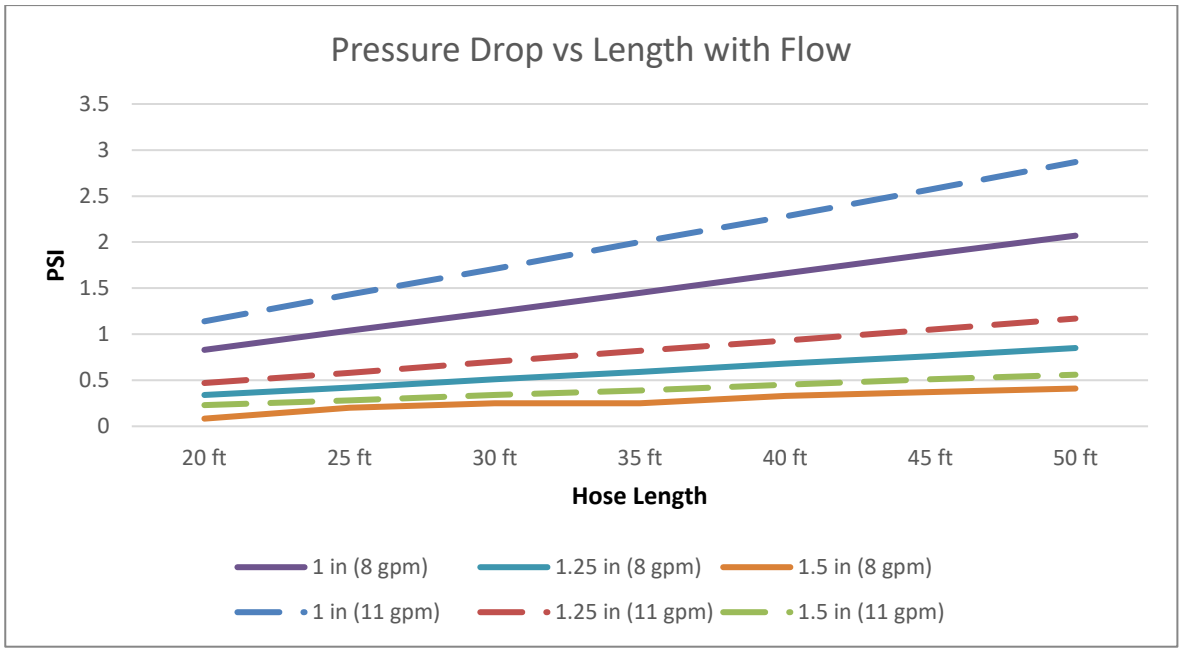

WARNING:

Do not install hose ends until proper hose length has been determined.

Never install a hose in a location where it will rub against another surface or abrasion member.

Do not position hoses with tight bend radii. Consult the hose manufacturers installation guidelines. Tight bends may kink and cause serious damage to the system and will void the system's warranty.

Use caution when tightening the hose ends to prevent the hose from becoming twisted.

Never install a 90° fitting at the pump inlet or outlet. Avoid the use of flow restricting fittings.

Do not form loops in the hose that may collect air or kink. Run hoses as straight as possible (but not taut) between connections.

2. SPS models LR-6.2, LR-8, and LR-MATRIX can be mounted on top of a vehicle, in the open, without requiring any additional coverings. Reference Figure 3 and minimum clearances around the perimeter of the generator's tray assembly. Also, do not position any obstructions directly in front of the system's oil cooler. If the system cannot be installed without maintaining the minimum clearances as indicated, or if you have any questions related to the installation of these systems, contact Smart Power Systems® at (231) 832-5525.

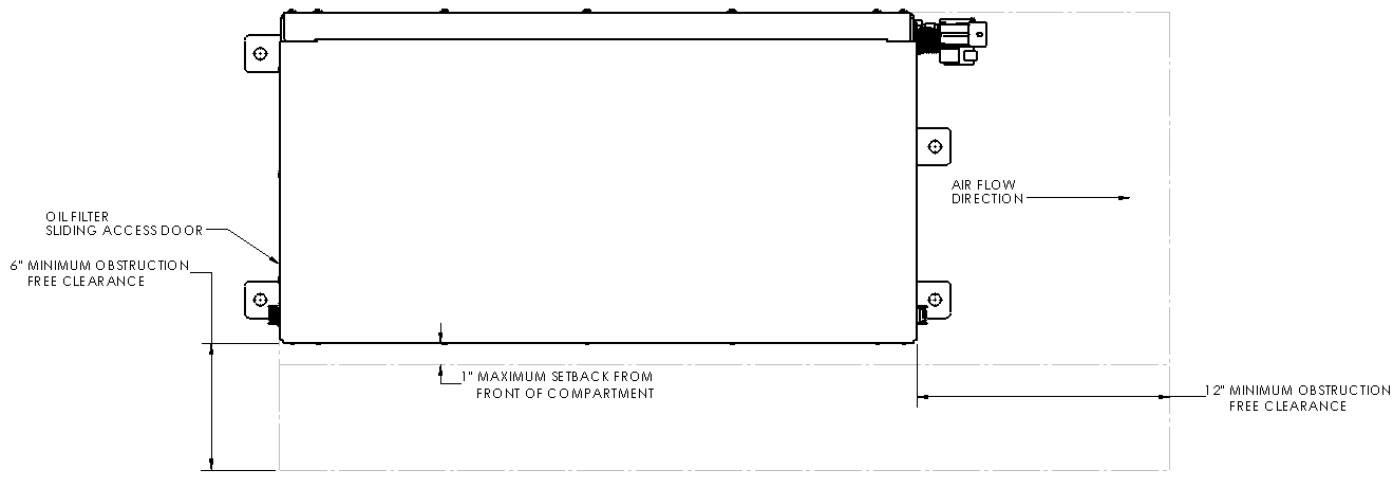

Figure 3 – Minimum Clearance for Proper Ventilation (Top View)

WARNING:

Do not mount the tray assembly in any location that is not well ventilated. External heat sources elevating the hydraulic fluid and/or the generator temperature will result in premature wear and degraded system performance and void the system's warranty.

3. The tray assembly must be mounted in a position that is higher than the pump. If the pump inlet hose is 10' in length or less, the tray and reservoir assemblies must be a minimum of 12" higher than the pump. **If the pump inlet hose is longer than 10', elevate the tray and reservoir assemblies an additional 12" for every additional 10' of pump inlet hose length.** See below for examples of minimum tray assembly elevations above the pump:

Pump inlet hose length	Minimum tray and reservoir elevation (above pump)
0 – 10 ft.	12 inches
15 ft.	18 inches
>20 ft.	24 inches

Please contact Smart Power Systems at (231) 832-5525 for technical support

4. Locate a position to mount the SPS Command & Control Center. The ideal location for the Command & Control Center will be in an area that is easily seen and accessed by the generator operator. When the generator system is in use, the Command & Control Center will continuously show the status of the generator, including faults (warnings) if they occur. The Command & Control Center can also be used to engage and disengage the generator. The Command & Control Center is water sealed and operates on low voltages, so pump house mounting is permissible. A 15 ft. water sealed harness is provided to connect the Command & Control Center to the system controller mounted within the generator tray assembly. Reference Figure 4 for the dimensions of the Command & Control Center.

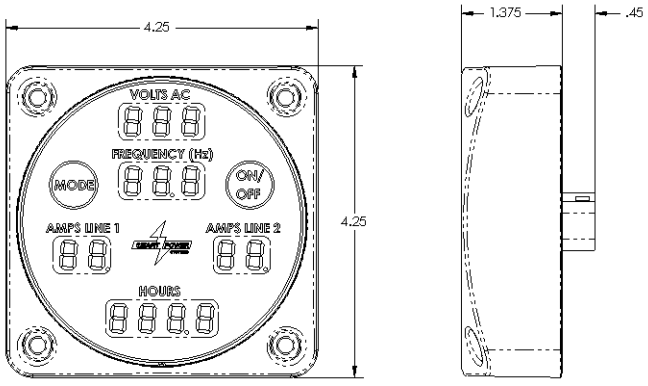

Figure 4 – Command & Control Center, P/N 1500047C

Installation Guide

1. Refer to the Chelsea PTO Installation Instructions to mount the PTO/pump unit on Ford Torqshift Transmission.

2. Refer to the XRT Installation Manual for Rescue Tool Installation (LR-MATRIX)

3. Locate and bore mounting holes for generator tray assembly as shown in Figure 5. Maintain minimum clearances as indicated in Figure 3.

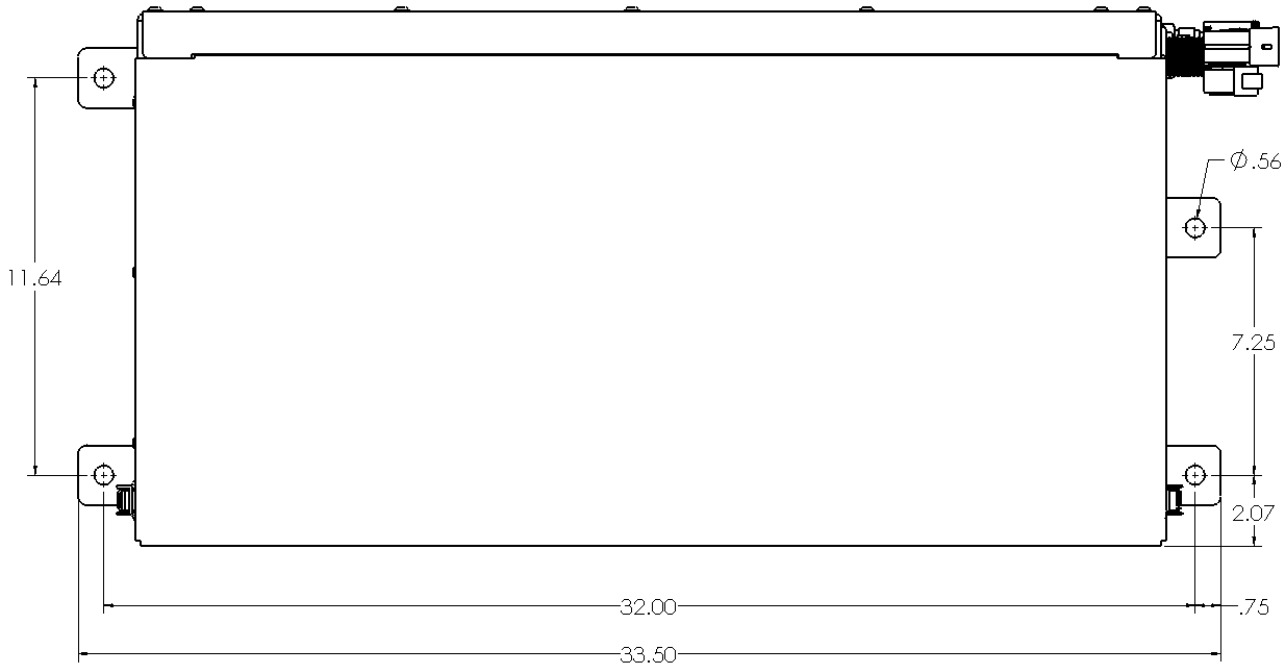

Figure 5 – Mounting Pattern for LR-6.2 LR-8, LR-MATRIX tray assemblies

4. Mount the tray assembly as high as possible within the structure of the vehicle. The ideal location for the generator is at the top of the truck in the dunnage area. The manufacturer must also take sufficient precautions to ensure that the generator is not mounted in the path of the deck gun/water cannon.

5. Mount the hydraulic generator tray securely to vehicle. Secure the generator to the floor of the enclosure using mounting hardware (not included), as shown in Figure 6.

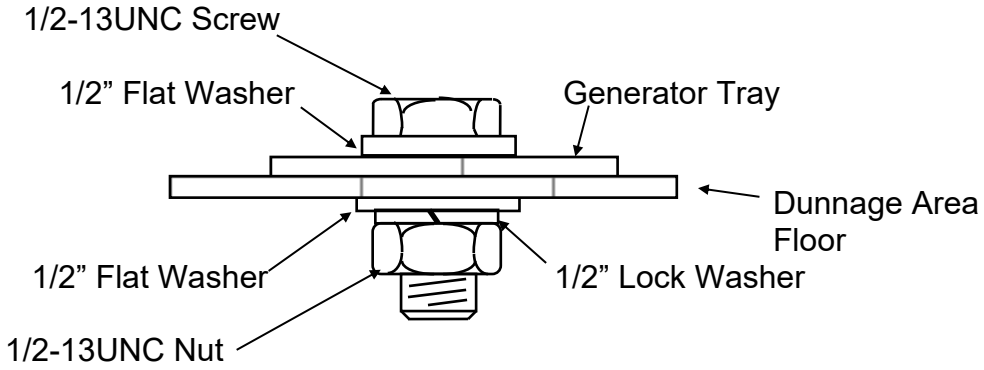

Figure 6

WARNING:

Never mount the Generator on its side or upside down. Always mount the generator upright with its base horizontal. Improper mounting will lead to poor performance and damage to the system and will void the system’s warranty.

Never operate an AC modular generator system that is not secured in place; damage will result.

Do not mount the hydraulic pump or tray assembly in any location that is not well ventilated. External heat sources elevating the hydraulic fluid and/or the generator temperature will result in premature wear and degraded system performance and void the system’s warranty.

6. Mount Command & Control Center:

   a. Create hole pattern as shown in Figure 7.
   b. Mount Command & Control Center to vehicle using #10 stainless steel fasteners.
   c. Connect Command & Control Center to system controller using P/N 3722004 harness.

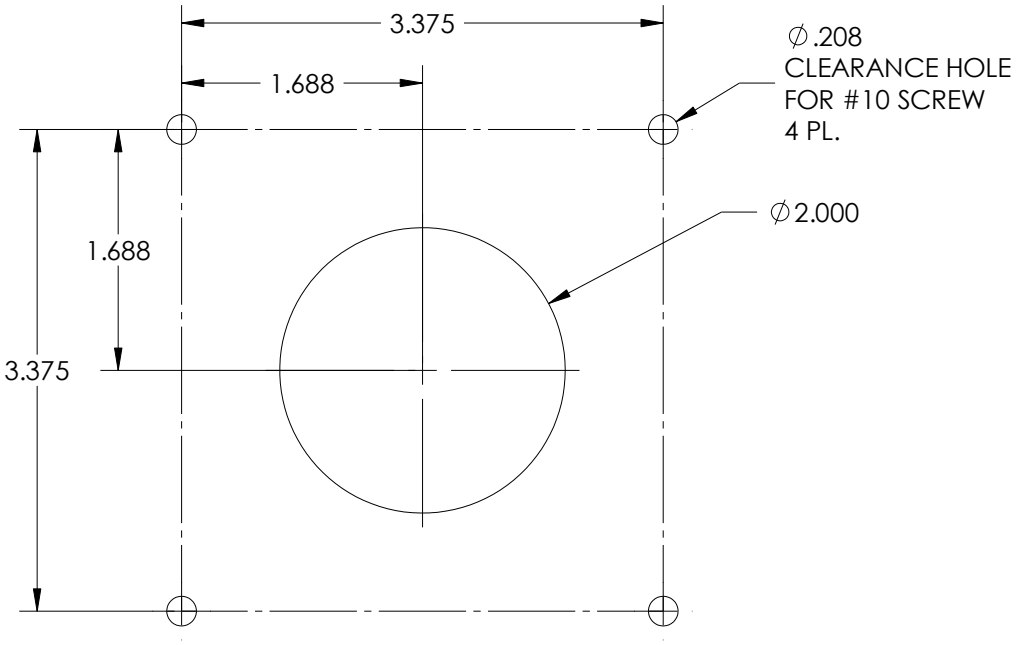

Figure 7 – Command & Control Center Mounting Pattern

7. Install hoses and tighten hose ends, using the **Hose Installation Guidelines.** Reference Figure 8 for hose and harness connection locations.

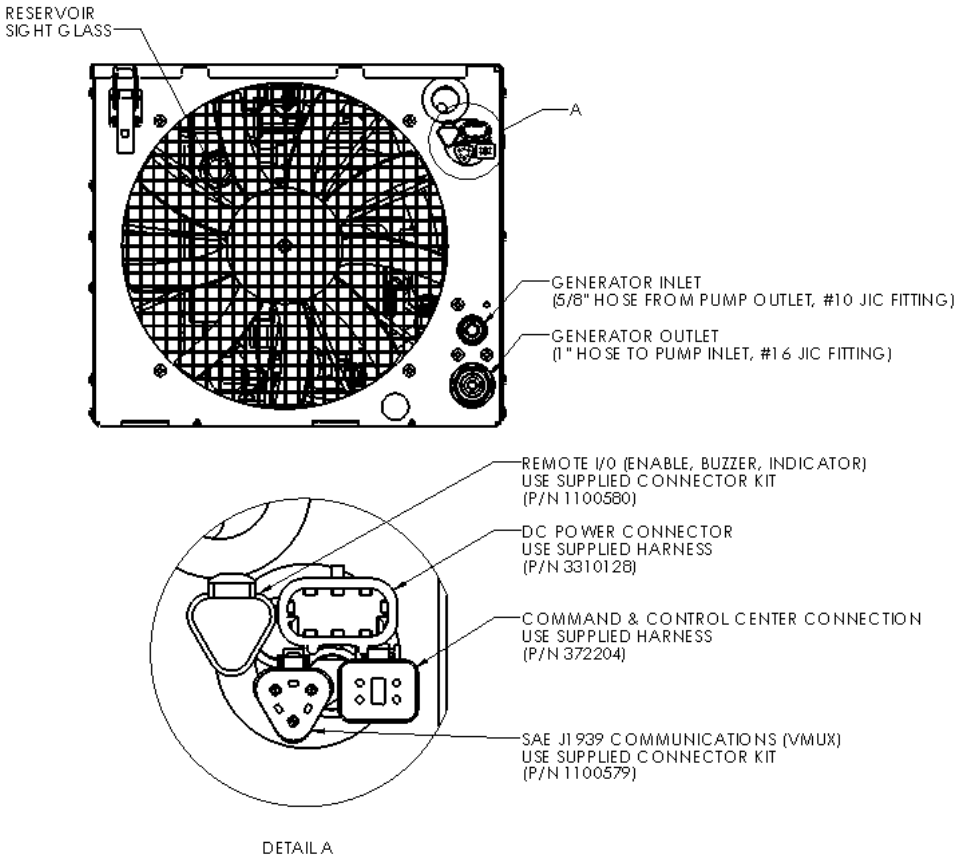

Figure 8 – Connection Interfaces (End View)

Hose Installation Guidelines

Note: See XRT manual for **rescue system hose installation guidelines, if equipped. The AC modular generator system and the XRT rescue tool pump use DIFFERENT hydraulic fluids. ONLY the A.C. generator system uses ISO 46 or DuraClean hydraulic fluid.**

Never install a hose without first properly cleaning it to remove debris and contaminants. It is recommended to clear hoses of debris using a projectile hose cleaning kit and preferred to do so with a cleaning solvent to remove as much contamination as possible.

To keep debris out of hoses while being positioned, cover the ends.

Never install a hose in a location where it will rub against an abrasive surface, sharp edge or corner. Use hose wraps or guards where they make contact with surfaces that may cause detrimental abrasion during flex.

Do not position hoses with tight bend radii. Tight bends may kink and cause serious damage to the system. Consult the hose manufacturer's guidelines when installing hoses.

Use caution when tightening the hose ends to prevent the hose from becoming twisted.

Never install a 90° fitting at the pump outlet or inlet.

Never use an inlet line fitting less than 1".

Never install a hose tightly between connections. Leave length for the hoses to expand.

Do not form loops in the hose that may collect air or cause kinking. Run hose as straight as possible (but not taut) between connections.

To keep debris out of hoses while being positioned, cover the ends.

Do not bundle installed hoses tightly together with banding. Hoses must have freedom to expand and flex.

Do not operate the system with external stresses applied to the hydraulic hoses. The A.C. modular hydraulic system generates hydraulic pressure approaching 3500 psi. A ruptured hose may result, causing personal injury or damage to the system.

Do not put any substance into the reservoir other than clean, fresh hydraulic fluid. Doing so will void the system's warranty.

8. Connect the vehicle's breaker panel to the generator output. The generator is pre-wired to supply 120/240 VAC for 60 Hz systems or 110/220 VAC for 50 Hz system, with the generator frame bonded to ground. Route the generator output conduit/wiring to the breaker panel and carefully cut the conduit to length without cutting the wire insulation. A conduit connector has been provided to connect the conduit to the breaker panel. Connect the (4) four generator output wires to the breaker panel as follows:

Phase A:	Black wire (120 VAC)
Phase B:	Red wire (120 VAC)
Neutral:	White wire
Ground:	Green wire

To completely utilize the generator's output capabilities, the 120 VAC loads must be equally divided between the generator's two main windings. Before wiring the vehicle, calculate the wattage of each 120 VAC load that will be connected to the generator. Next, create two groups of loads based on total wattage (add the individual wattage of each load together). Exchange loads between the two groups until the total wattage of the two groups is as close as possible to being equal. Wire the system with one group connected to Phase A (BLACK) and neutral, with the other group connected to Phase B (RED) and neutral.

ALTERNATE CONFIGURATION: 120 VAC for **60 Hz** systems: If the application requires 120 VAC for 60 Hz systems only, the generator terminal strip should be configured as depicted below. This method ensures balanced loading of the generator, fully optimizing the system's capabilities. Make the following wire connections at the terminal strip:

a) place one jumper between wire 1 and wire 3.
b) place the second jumper between wire 2 and wire 4.
c) connect the phase wire from the breaker box to either wire 1 or wire 3.
d) connect the neutral wire from the breaker box to either wire 2 or wire 4.
e) connect the ground wire from the breaker box to the green wire.

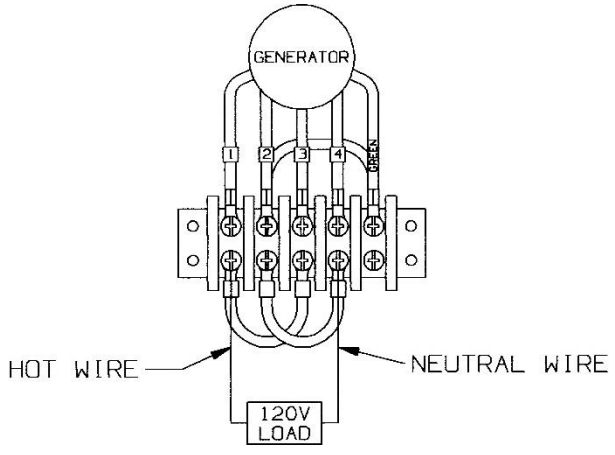

60 Hz

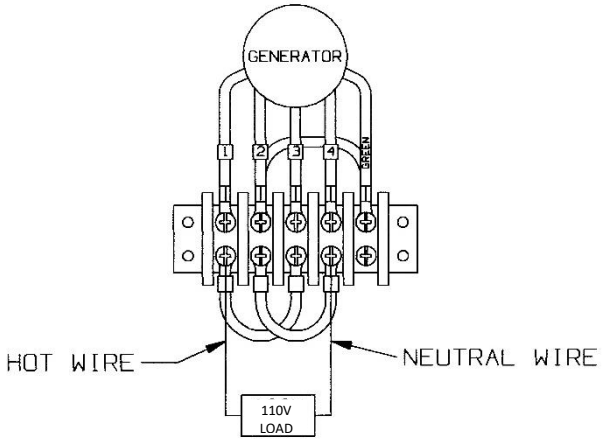

50 Hz

WARNING:

Wiring of the A.C. modular generator system and electrical distribution throughout the vehicle must be done in accordance with applicable sections in the National Fire Protection Association's document NFPA 1900, the National Electrical Code® and/or other applicable, recognized electrical code and by a certified electrician.

Smart Power Systems® A.C. modular generators are supplied with the neutral bonded to ground. Refer to National Fire Protection Association's document NFPA 1900, National Electrical Code®, and/or other applicable recognized electrical codes before wiring an SPS A.C. modular generator system.

Never wire any loads to the generator's output without a circuit breaker in series with the load. Damage to the generator, to the components within that circuit, electrical shock, or fire may result if a short occurs in an unprotected circuit. Run all 120 VAC and 240 VAC electrical connections between the generator and the distribution panel in conduit. Bypassing the SPS factory installed breaker will void the system's warranty. Replacement breakers must be obtained from Smart Power Systems® approved sources only.

Do not perform any wiring installations or modifications while the system is operating. The A.C. modular generator system will generate enough voltage to produce a fatal shock.

Never touch any live connections while the system is operating.

Never operate the system with the generator cover removed.

9. Connect 12 VDC (vehicle battery positive) to the generator's system controller input (reference Figure 2 and Figure 8). Connect the RED wire from the system controller, marked "Vehicle +12V supply" to the vehicle's ignition circuit through a 30 amp fuse. Connect the BLACK wire to the vehicle's ground (vehicle battery negative).

WARNING:

12 volts DC must be directly applied to the generator system controller whenever the hydraulic pump is engaged. Failure to do so may cause excessive fluid temperature, damaging the system components and will void the warranty.

Never come near a running fan with loose items such as long hair, clothing, jewelry, ties, items that can fall out of pockets, etc.

Do not attempt to operate the generator with the tray assembly top lid open. Serious personal injury may result if clothing, fingers or other body parts come in contact with rotating fan blades.

Never operate the system with fan disabled or removed, or with the lid open. System over-heating will result, and this will void the system's warranty.

Improper wiring of the generator system to the vehicle may discharge the vehicle battery, cause a fire, or cause improper operation of the generator system.

10. Bleed air from the hydraulic system:
WARNING: If equipped, verify XRT system has been completely installed and filled with hydraulic fluid prior to engagement of A.C. modular generator. (Reference installation check list in XRT manual).

    The system controller has been designed to provide a purge option. With this option applied, the generator will turn at a reduced speed to minimize wear to the system's hydraulic components while purging air from the system. The generator is shipped from the factory with the purge option enabled. Reference Figure 10, below, for instruction on manually enabling purge mode.

    a. Turn off the generator's main power breaker. Refer to Figure 9 for the breaker location on the electrical enclosure, below.
    b. Ensure hoses are securely attached to the hydraulic pump and not connected to the generator.
    c. Fill all hoses with fresh hydraulic fluid before connecting them to the generator system. This will significantly reduce the time required to purge air from the system.
    d. Fill the Gen-set reservoir with fresh hydraulic fluid until the fluid in the sight gauge is ½ to ¾ from the top. As hydraulic oil fills the system, maintain the level of fluid in the reservoir.
    e. Ensure the generator purge option is enabled. Refer to Figure 11.
    f. Start the vehicle and engage the Power Take-Off (PTO). (Note: Pump may cavitate briefly while air is purging, making noise.)

g. The automatic purging function will cancel after the hydraulic pressure has stabilized, and the Command & Control Center will display all zeroes.
h. Check for hydraulic fluid leaks, all hose connections must be tight. **Continue monitoring the hydraulic fluid level, adding fluid as needed to keep the level in the sight gauge**.

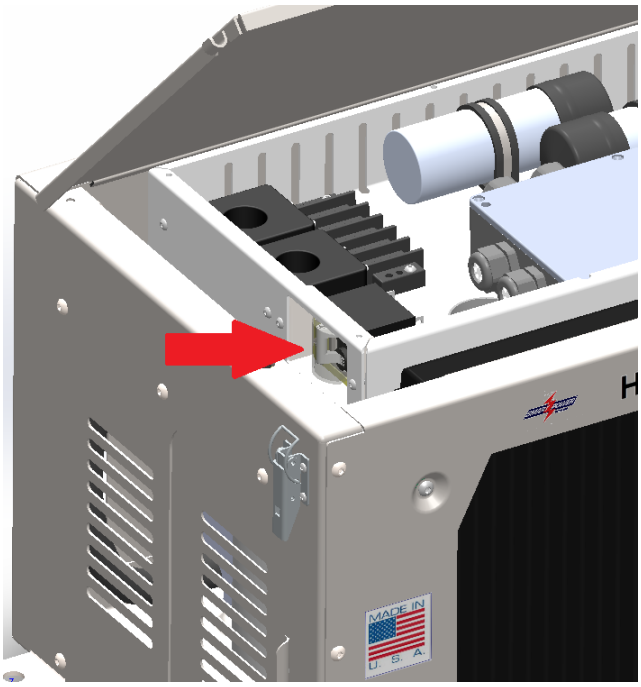

Figure 9 – Main Power Breaker

WARNING:

Never operate the system without the filler/breather plug installed. Contaminants may enter the hydraulic fluid through the filler opening, causing premature wear on the hydraulic components and void the system's warranty.

Never apply a load to the generator while there is air trapped in the hydraulic fluid. Damage to the system's hydraulic components, as well as ruptured hoses, may result and void the system's warranty.

Always run the purge cycle after installation, after replacing the hydraulic fluid and the filter, or after making any other repairs that may allow air into the hydraulic system. Failure to do so will void the system's warranty.

Enabling System Purge Option

The purge option can also be set by performing the following steps:

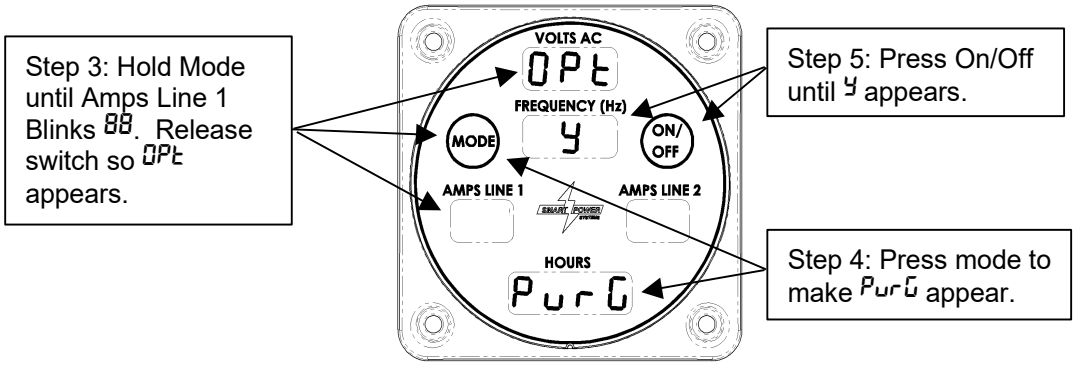

Figure 10 – Enabling Purge Mode

1. If the Command & Control Center is dark, press the Mode switch to put the display into Normal mode.
2. If the Display looks like Figure 11, the purge option is enabled.
3. Otherwise, press and hold the Mode switch until the Amps Line 1 field begins blinking 88 (more than 10 seconds). Release the switch so OPt appears. Reference Figure 10.
4. Press (and release) the Mode switch until PurG appears.
5. Press the On/Off switch until a Y appears, indicating Purge option is Active.
6. Return to system purge display by pressing the Mode switch repeatedly until the screen shown in Figure 11 is displayed. Purge will still be active.

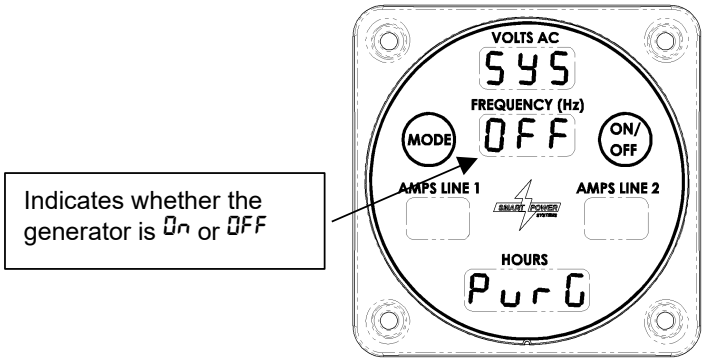

Figure 11 – Display with Purge Option Enabled

i. Engage the Power Take-Off (PTO). (Note: Pump may sound rough for a few minutes due to entrapped air.).

j. Check for hydraulic fluid leaks. All hose connections must be tight. **Monitor the hydraulic fluid level in both the A.C. modular generator system and the XRT system (if equipped), adding fluid to both as needed**.

11. Prior to applying full load, with the system operating, verify proper operation of the cooler fan by feeling for airflow being pulled into the cooler and pushed out by the fan. If the air is not being pulled through the cooler face, contact Smart Power Systems® at (231) 832-5525 for more information. Also, verify that the air passing through the cooler and the fan is not restricted.

WARNING:

Improper ventilation will result in system overheating, reduced performance and possible damage to the system and/or cause personal injury. If the system is installed such that improper ventilation exists, the system's warranty will be voided.

The Auto-Start Option

If the auto-start option is enabled, the generator will begin generating electricity whenever the PTO is engaged. If the auto-start option is disabled, the generator will not output electricity after PTO engagement until the "on/off" switch is pressed. Select the auto-start function by performing the following steps:

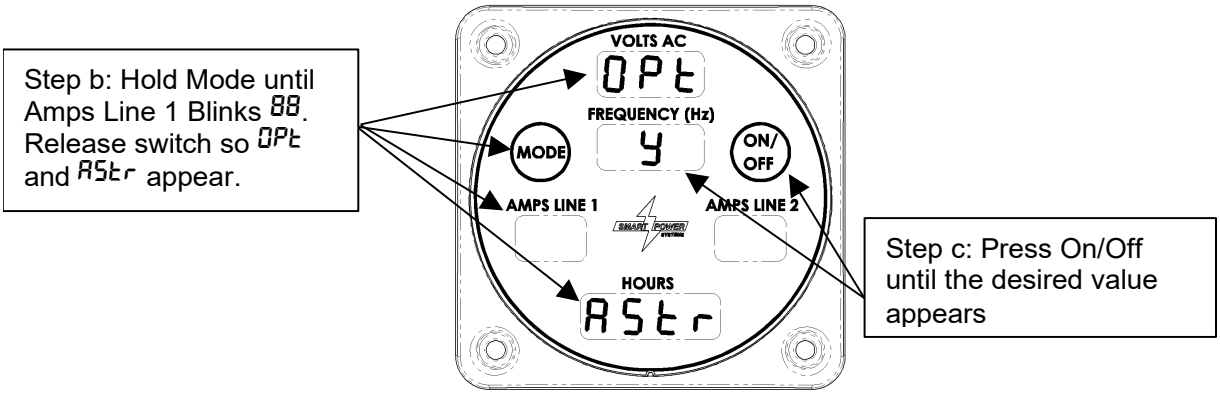

Figure 12 – Enabling Auto-Start

Enabling Auto-Start Option

a. If the Command & Control Center is dark, press the Mode switch to put the Command & Control Center into Normal mode.

b. Press and hold the Mode switch until the Amps Line 1 field begins blinking 88 (more than 10 seconds). Release the switch so OPt and ASTr appear. Reference Figure 12.

c. Press the On/Off switch until the desired value appears. A Y means Auto-Start is enabled, an n means Auto-Start is disabled.

d. Return to Normal mode by pressing Mode.

Operation
For A.C. Modular Generator System
(Reference XRT Manual for Operation Instructions of rescue tool pump system)

1. The Command & Control Center will show the generator's output voltage, frequency, current, and system run time whenever the Command & Control Center is in Normal mode. To access Normal mode, press the Mode switch repeatedly until the correct information is displayed (reference Figure 13).

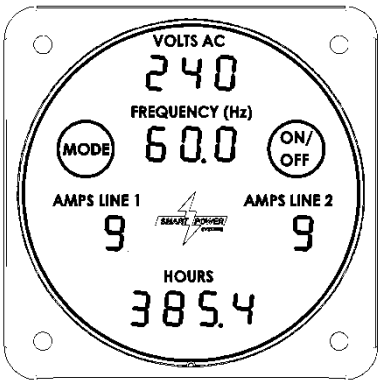

Figure 13 – Normal Operating Mode

2. The PTO driving the SPS hydraulic pump must be engaged for the system to generate electricity.

3. The Command & Control Center is equipped with two Smart Touch® switches, labeled "Mode" and "On/Off" respectively. These switches do not require pressure to be activated but instead sense the presence or absence of your fingertip. The decimal points in the "Amps Line 1" and "Amps Line 2" fields of the Command & Control Center are used to indicate the status of the Mode and On/Off switches respectively (reference Figure 14.)

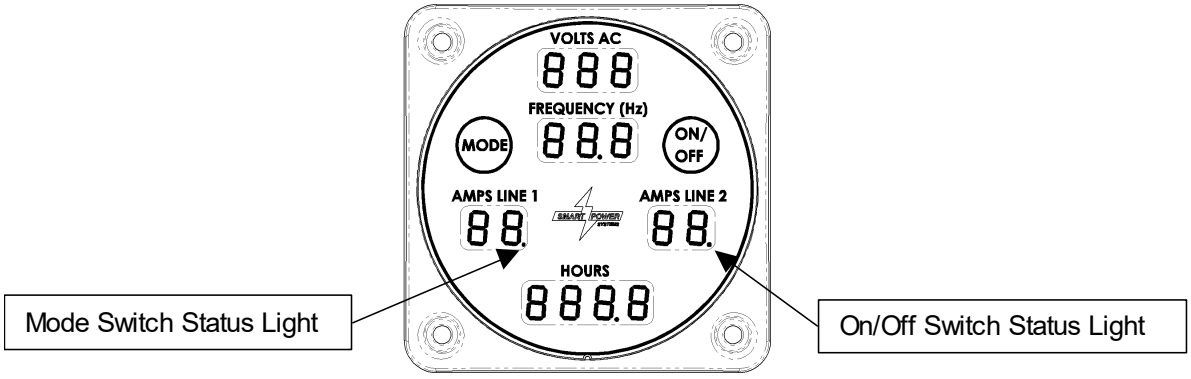

Figure 14 – Switch Status Lights

Normally, the status lights will be off. When a switch is pressed, the corresponding light will be illuminated. When a status light is flashing, the corresponding switch is calibrating, and the switch should not be pressed. The system controller will ignore the switch while it is calibrating.

4. If the system controller is powered on, but the generator is not running and no buttons are pressed for 5 minutes, the system will enter Quiescent mode. In Quiescent mode all displays are blank to conserve power. To return to Normal mode from Quiescent mode, press the Mode switch.

5. Whenever the PTO is engaged and the system controller is in Normal or Quiescent mode, the generator can be switched from an “off” state to an “on” state, and vice-versa, by pressing the “on/off” switch on the Command & Control Center. If the PTO is not engaged, the hydraulic pressure is too low (under 150 PSI) the generator will display nO PtO PrES. If the generator enclosure cover is not closed when the “on/off” switch is pressed, LId OPEn will be displayed (reference Figure 15):

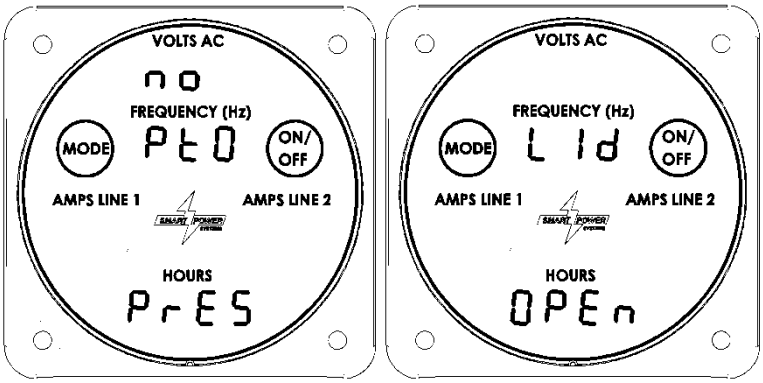

Figure 15 – Low Hydraulic Pressure and Lid Open

6. If the system controller has been set to “auto-start”, the generator will begin to produce power whenever the PTO is engaged. See installation instructions for the directions to select the “auto-start” options.

7. Additional Information provided by the Command & Control Center:

   a. When the Command & Control Center is in Normal mode, pressing the Mode switch once will display the oil temperature (reference Figure 16).

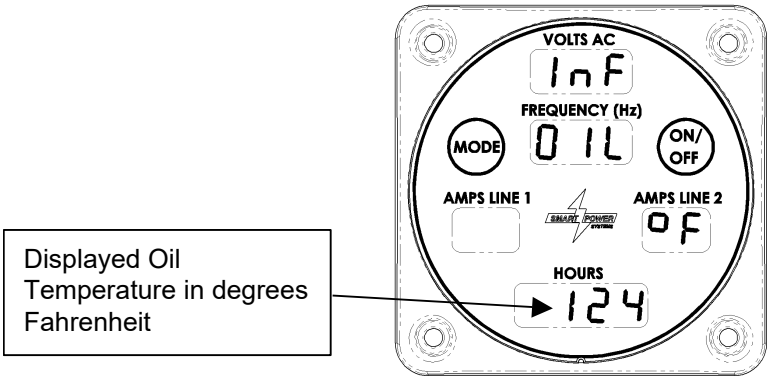

Figure 16 – Temperature Display

   b. Inlet pressure to the generator will be displayed next in the hours field by pressing the Mode switch a second time as seen in Figure 17.

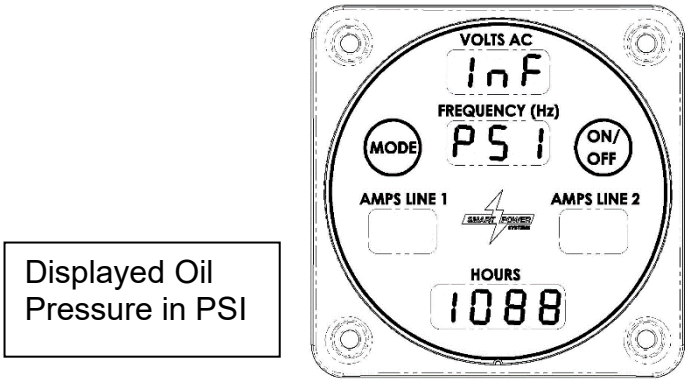

Figure 17 – System Inlet Pressure Display Example

c. DC supply voltage as measured by the generator system controller will be displayed next in the hours field by pressing the Mode switch a third time as seen in Figure 18.

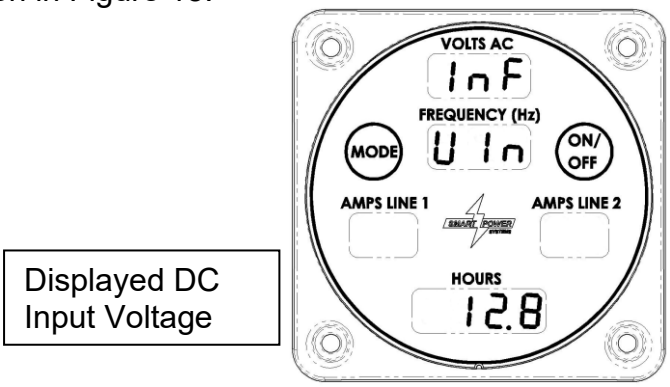

Figure 18 – DC Input Voltage Display

d. Pressing the Mode switch a fourth time will cause the amount of time since the oil filter was last changed to be displayed in the hours field as seen in Figure 19

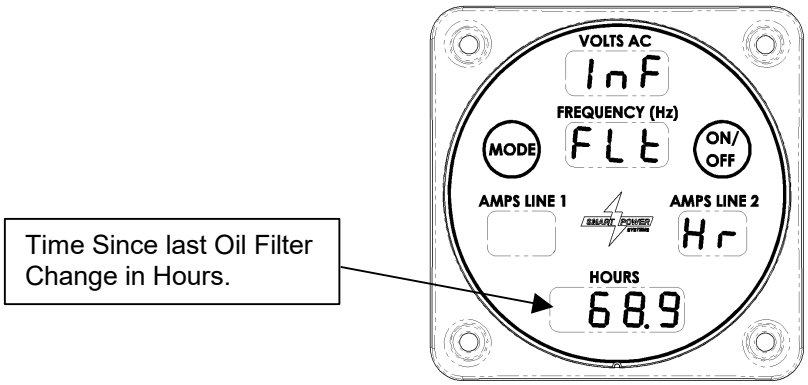

Figure 19 – Oil Filter Run Time Display

e. When the Command & Control Center is in Normal mode, pressing the Mode switch five times will cause the configuration of the generator system controller to be displayed. The "Lr" indicates the controller is configured to run an LR-series generator, and the number displayed corresponds to the maximum power output of the generator in kilowatts (reference Figure 20).

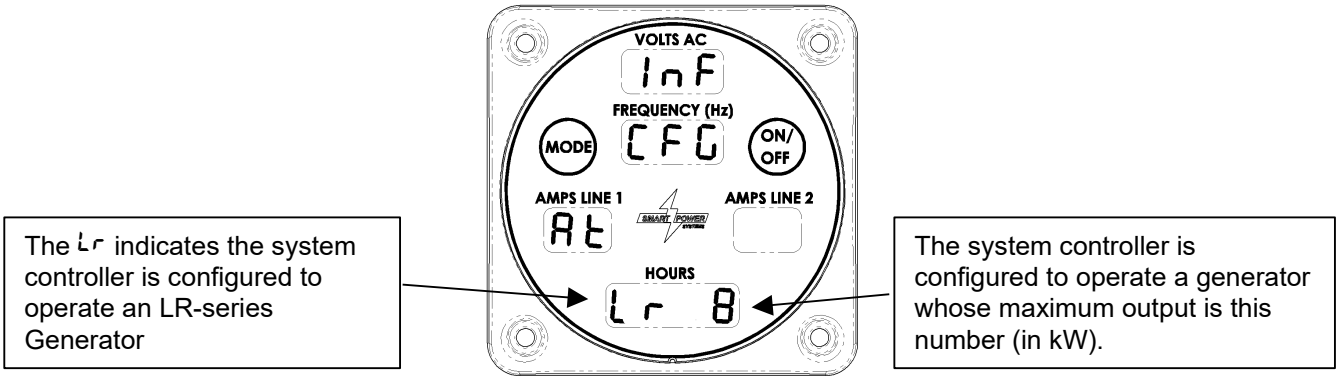

Figure 20 – Example Configuration Display

f. If there are no active faults, pressing the Mode switch once more will return the Command & Control Center to its normal mode. If there are active faults, they will be displayed in succession, one each time you press the Mode switch.

See Diagnostics in the trouble shooting section for more information on faults.

8. If the system measures a hydraulic oil temperature that exceeds 165°F (74°C), the system will begin displaying an alarm. If the system measures a hydraulic oil temperature that exceeds 175°F (80°C), the generator will automatically shut down in 30 minutes unless the shutdown is overridden. If the temperature of the hydraulic oil is measured at or above 190°F, the system will immediately shut down whether or not the high temperature oil warning is overridden. To override the shutdown, perform the following steps:

Note: The system must measure a hydraulic oil temperature that exceeds 175°F for this procedure to work.

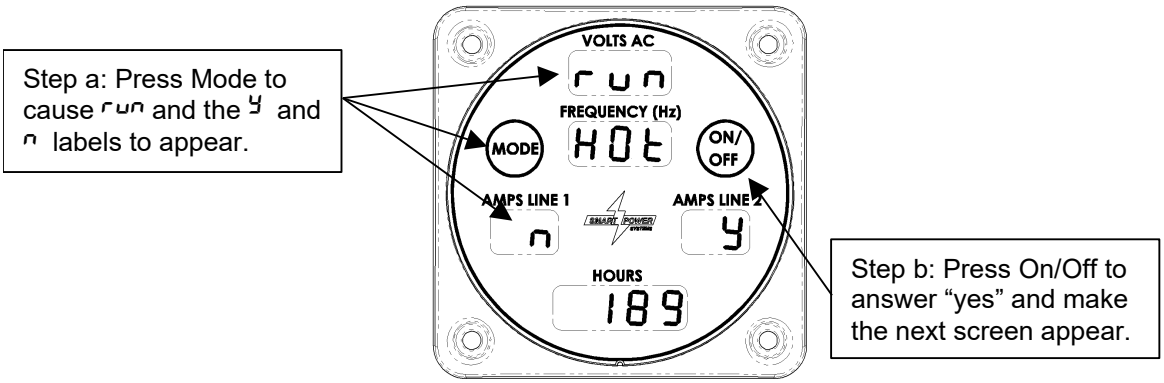

Figure 21 – Hot Oil Override Display

a. From the Normal mode display, press Mode, as if you wanted to display the oil temperature. The screen shown in Figure 21 will be displayed instead, asking if you want to “Run hot.” This screen will also be displayed if you attempt to start the generator with the condition present.

b. Note the y and n labels below the Mode and On/Off switches. Press the On/Off switch to answer “yes” and proceed to the next screen or press Mode to answer “no” and proceed to the oil temperature display.

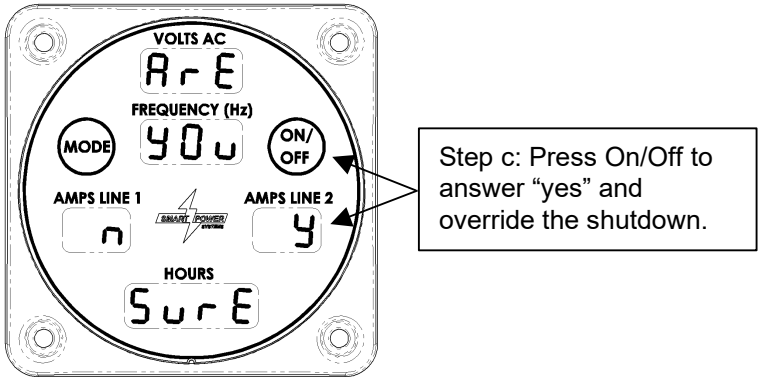

Figure 22 – Hot Oil Fault Override Confirmation

c. If your answer was “yes” in the previous step, the confirmation screen shown in Figure 22 will be displayed. Again, note the y and n labels below the Mode and On/Off switches. Press the On/Off switch to answer “yes” and override the shutdown. Press Mode to answer “no” and proceed to the oil temperature display.

Note: The hydraulic oil is rated for operation at temperatures between 40°F and 175°F. If you override the system and command it to operate at oil temperatures above 175°F, the system output power may degrade, and you will void the system’s warranty.

9. If the system detects an insufficient level of hydraulic fluid in the reservoir, it will begin displaying an alarm. If the generator was running when the fault is detected, it will automatically be shut down in 30 minutes unless the shutdown is overridden. To override the shutdown, perform the following steps:

Note: The oil level in the reservoir must be low for this procedure to work.

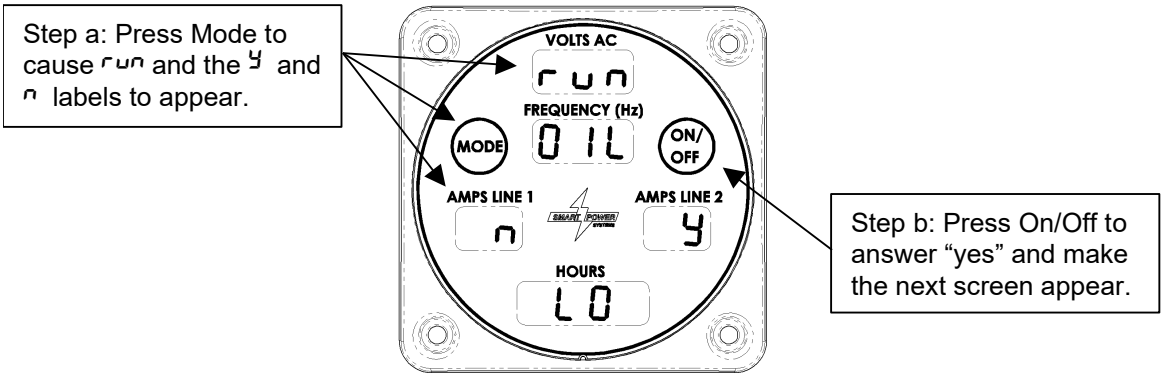

Figure 23 – Low Oil Fault Override Display

a. From the Normal mode display, press Mode, as if you wanted to display the oil temperature. The screen shown in Figure 23 will be displayed instead, asking if you want to “Run [with the] Oil Lo[w].” This screen will also be displayed if you attempt to start the generator with the condition present.

b. Note the y and n labels below the Mode and On/Off switches. Press the On/Off switch to answer “yes” and proceed to the next screen or press Mode to answer “no” and proceed to the oil temperature display.

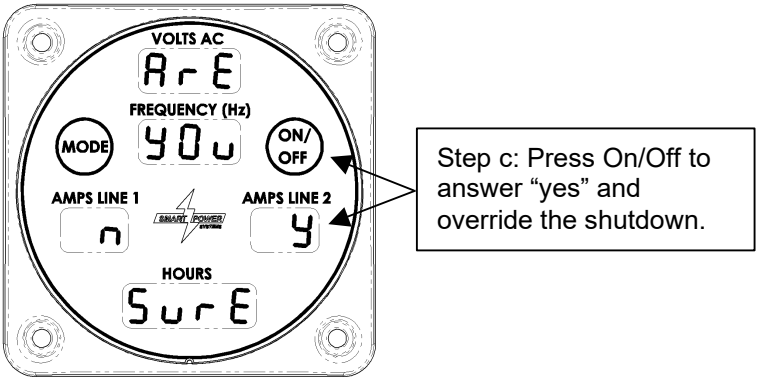

Figure 24 – Low Oil Fault Override Confirmation

c. If your answer was “yes” in the previous step, the confirmation screen shown in Figure 24 will be displayed. Again, note the y and n labels below the Mode and On/Off switches. Press the On/Off switch to answer “yes” and override the shutdown. Press Mode to answer “no” and proceed to the oil temperature display.

Note: If you override the system and command it to operate with insufficient hydraulic fluid, the system output power may degrade, and you will void the system's warranty.

10. If the system determines the hydraulic fluid temperature sensor is faulty, it will begin displaying an alarm. If the generator was running when the fault is detected, it will automatically be shut down in 30 minutes unless the shutdown is overridden. To override the shutdown, perform the following steps:

Note: The alarm must be active for this procedure to work.

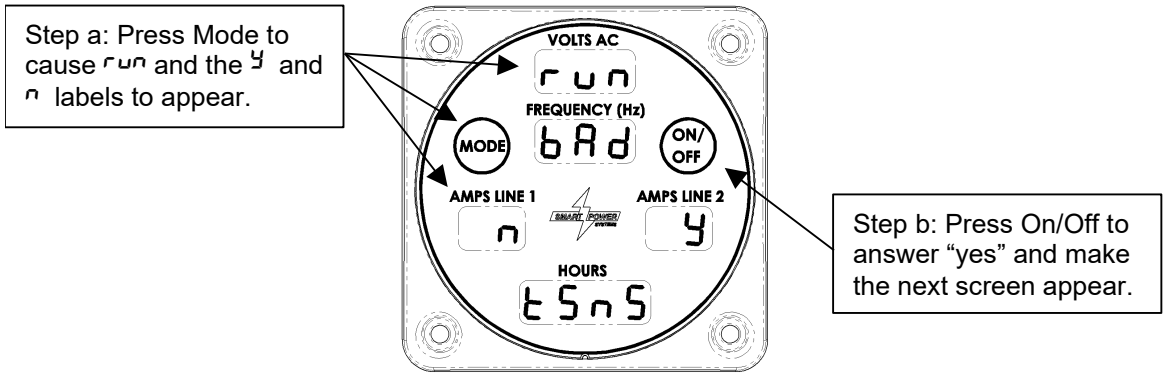

Figure 25 – Temperature Sensor Fault Override

a. From the Normal mode display, press Mode, as if you wanted to display the oil temperature. The screen shown in Figure 25 will be displayed instead, asking if you want to "Run [with a] bad tSnS [temperature sensor]." This screen will also be displayed if you attempt to start the generator with the condition present.

b. Note the y and n labels below the Mode and On/Off switches. Press the On/Off switch to answer "yes" and proceed to the next screen or press Mode to answer "no" and proceed to the oil temperature display.

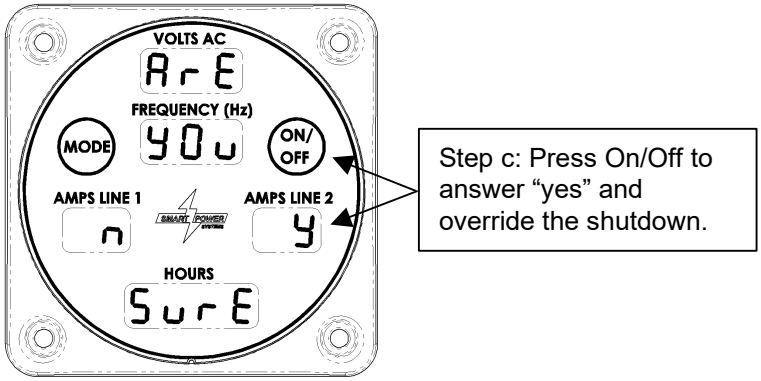

Figure 26 – Temperature Sensor Fault Override Confirmation

c. If your answer was “yes” in the previous step, the confirmation screen shown in Figure 26 will be displayed. Again, note the y and n labels below the Mode and On/Off switches. Press the On/Off switch to answer “yes” and override the shutdown. Press Mode to answer “no” and proceed to the oil temperature display.

Note: If you override the system and command it to operate with a faulty temperature sensor, the system may overheat and you will void the system’s warranty.

11. If the system determines the generator output voltage is out of range, it will begin displaying an alarm. This fault can be detected only when the generator is operating and will automatically shut down the generator after 30 minutes unless the shutdown is overridden. To override the shutdown, perform the following steps:

Note: The alarm must be active for this procedure to work.

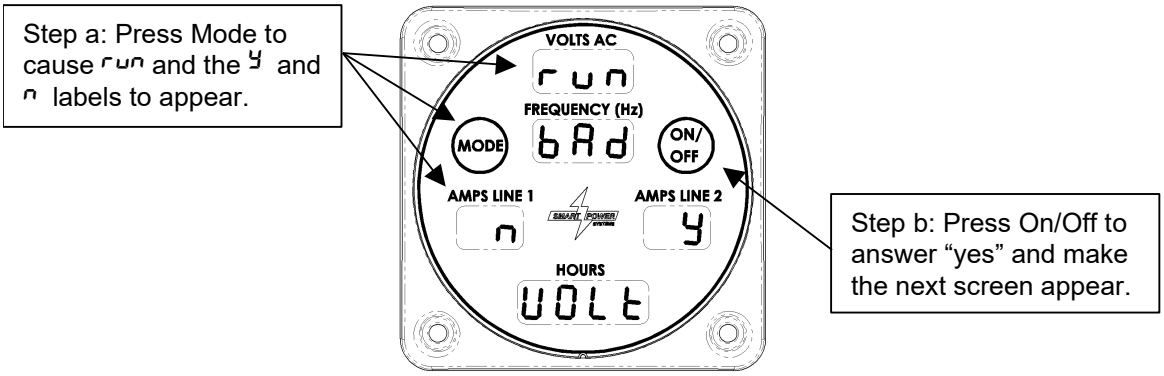

Figure 27 – Voltage Range Fault Override

a. From the Normal mode display, press Mode, as if you wanted to display the oil temperature. The screen shown in Figure 27 will be displayed instead, asking if you want to “run [with] bAd UOLt[age].”

b. Note the y and n labels below the Mode and On/Off switches. Press the On/Off switch to answer “yes” and proceed to the next screen or press Mode to answer “no” and proceed to the oil temperature display.

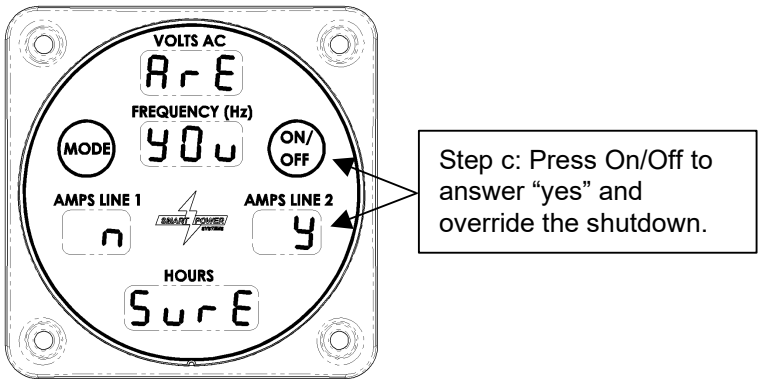

Figure 28 – Voltage Range Fault Override Confirmation

c. If your answer was “yes” in the previous step, the confirmation screen shown in Figure 28 will be displayed. Again, note the y and n labels below the Mode and On/Off switches. Press the On/Off switch to answer “yes” and override the shutdown. Press Mode to answer “no” and proceed to the oil temperature display.

Note: If you override the system and command it to operate with voltage out of range, the system may damage the equipment it is powering, and you will void the system’s warranty.

Special Operating Instructions

Cold Weather Procedure:

If the generator system is "started" when the hydraulic oil temperature is below 40°F, the following message will be displayed on the Command & Control Center (reference Figure 29):

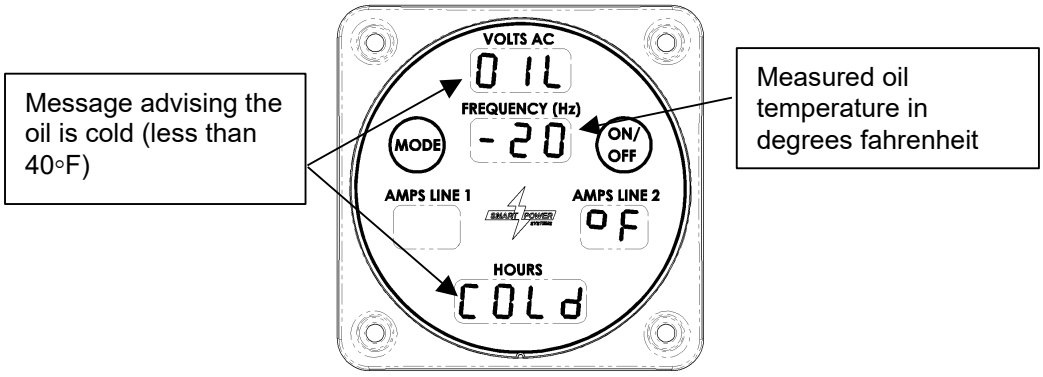

Figure 29 – Cold Hydraulic Fluid Operation

Operating Modes when the system START button is activated (or when the system is in "autostart"):

- When the meter displays hydraulic oil temperatures below 20°F, the hydraulic system will bypass the generator motor, and the generator will not produce power. This mode warms the hydraulic oil.

- When the meter displays hydraulic oil temperatures between 20° and 40°F, the generator rotor will turn at a reduced RPM, and the generator will not produce power. This warms the hydraulic oil to 40°F.

- When the meter displays hydraulic oil temperatures that exceed 40°F, the system will then commence full power generating operations.

Optional J1939 Interface

1. The integrated J1939 interface makes it possible to connect the generator's ECU to a vehicle multiplexing system for monitoring, control and real time diagnostic information. Everything available via the Command and Control Center, and more, is available through the J1939 interface.
2. Multiplex developers who have worked with Smart Power Systems® will be able to supply database information and screen layouts to their OEM customers. Potential display screens and available information can be seen in Figures 30 and 31, below. For independent development please contact Smart Power Systems® at (231) 832 5525 for J1939 message details.



Figure 30 – J1939 Multiplex Monitoring



Figure 31 – J1939 Multiplex Control and Diagnostic Information

3. Generator systems equipped with the J1939 interface have a three-pin harness as shown above in the interface drawing, Figure 8. The connector pinout can be found in the electrical schematic in Figure 2, above. A 120 Ohm termination must be added if the generator's ECU is a single network node.

Maintenance Instructions
For A.C. Modular Generator System
(Reference XRT Manual for Maintenance Instructions of rescue tool pump)

WARNING:

Do not perform maintenance while system is running.

1. Perform regular, periodic checks to verify:

    a. The cooler, the cooler fan and generator vents are not plugged by debris.
    b. There are no fluid leaks within the framework of the generator, along the hoses, or at the pump.
    c. The hoses are not cut, chafed, bulged or kinked.
    d. That no electrical connections are loose.
    e. That the hydraulic fluid level in the reservoir is between ½ to ¾ full in the sight gage and the hydraulic fluid is clean and bright red in color.
    f. That the bolts mounting the pump to the PTO are not loose.
    g. If the hydraulic fluid appears dirty or black in the reservoir sight gage, replace the fluid and filter immediately. Also, if the hydraulic fluid sustains a temperature over 175° F, replace the fluid immediately. Oxidation can occur naturally over time and can be accelerated with over temperature operation, affecting generator output. Always change the filter when the hydraulic fluid is changed.

WARNING:

When adding or replacing hydraulic fluid, always use clean, new hydraulic fluid.

Do not power wash the generator. Doing so will void the system's warranty.

Do not allow liquid to enter the generator.

If the outside of the generator requires cleaning, wipe surface with a damp cloth.

Clean the Command and Control Center using soap and water with a soft cloth only. Improper cleaning, handling and use that may scratch, gouge, chip, fade or otherwise damage the surface coating and display surfaces are not covered under the device warranty.

2. Replace the oil filter after every 250 hours of operation, or every three (3) years (whichever comes first). Use fresh hydraulic fluid and one of the following filters:
    Hydac 0080 MA010 P
    Purolator 20101
    Fram P-1653-A (10 Micron 8 GPM)
    WIX 51551 (10 Micron 8 GPM)

    Lubricate the oil filter gasket with hydraulic fluid before installation to permit proper sealing of the filter.

WARNING:

Do not bypass the filter or alter filtration plumbing in any way. Doing so will void the system's warranty.

3. The system controller automatically records the time from the previous filter change. The hours since the previous filter change can be accessed using the Command & Control Center by pressing the Mode switch until the following screen appears (reference Figure 32):

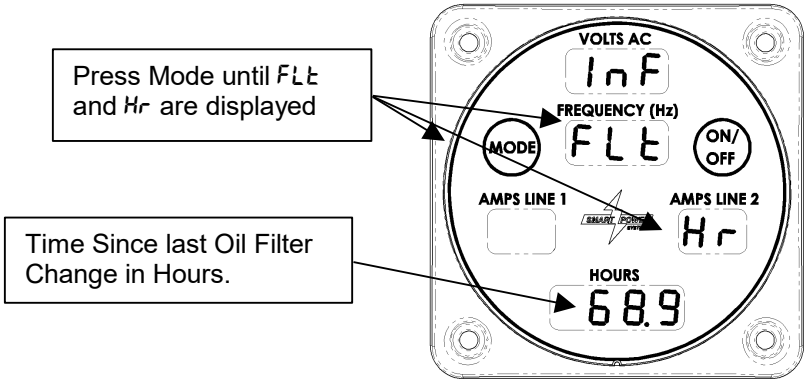

Figure 32 – Oil Filter Run Time Display

4. The Command & Control Center will flash a fault when 250 hours have passed since the previous filter change. After replacing the filter, this fault can be removed from the Command & Control Center, and the filter run time can be reset by performing the following steps:

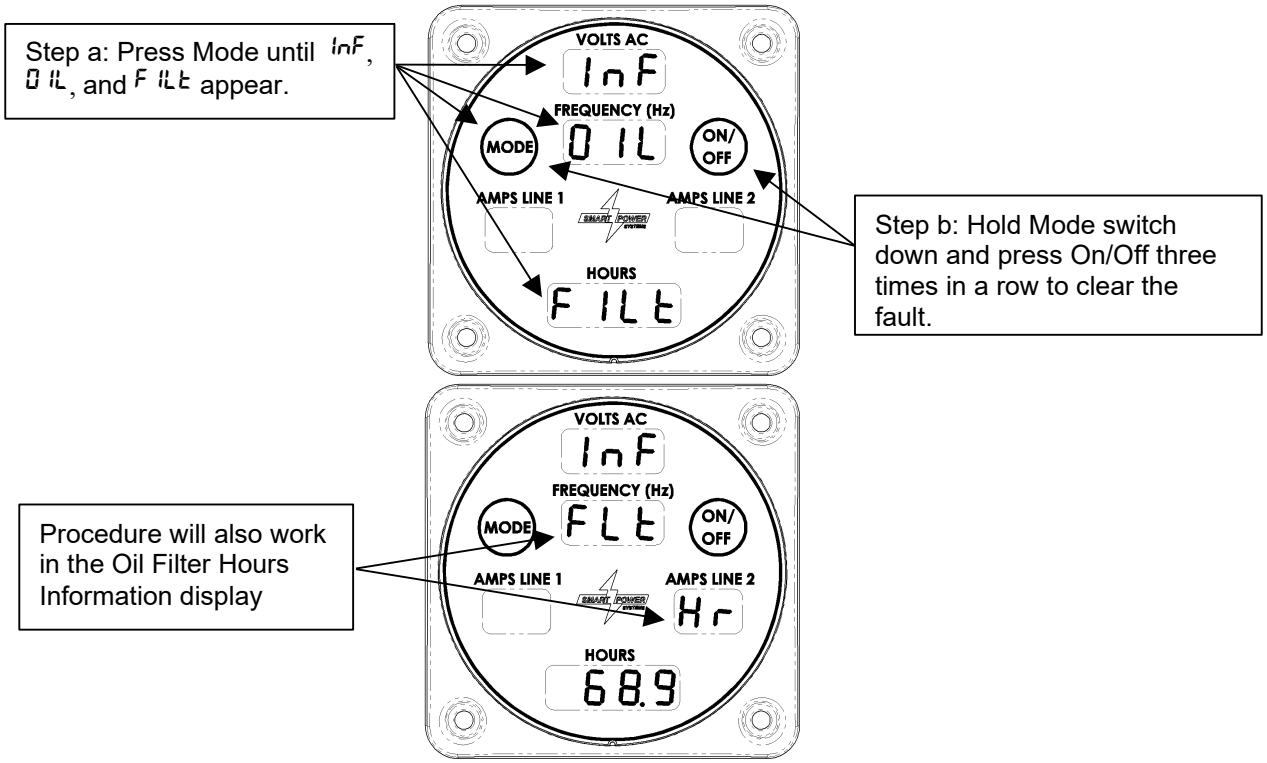

Figure 33 – Oil Filter Service Warning

a. Press the Mode switch repeatedly until one of the screens shown in Figure 33 appears.
b. While holding the Mode switch down, press and release the On/Off switch three times in succession, then release the Mode switch. The Oil Filter Fault display will be removed and replaced by another screen. The fault has been cleared and the timer reset. Note: Perform this step every time the filter is changed.
c. When the timer has been reset, the system automatically enters purge mode to purge any entrapped air from the hydraulic lines. See Figure 11.

Troubleshooting Guide

Diagnostic:

The Command & Control Center will display certain faults that can assist a service technician in trouble shooting a problem with the generator system. When these faults occur, the fault message will periodically flash on the Command & Control Center, interrupting the normal display. Reference Figure 34 for an example of an over-current fault.

The faults can also be accessed by repeatedly pressing the mode switch. After displaying the oil temperature, oil filter time, and configuration, the next display will be the first active fault. Each time the Mode switch is pressed, the next fault will be displayed. When there are no more faults to display, the Command & Control Center will return to Normal mode.

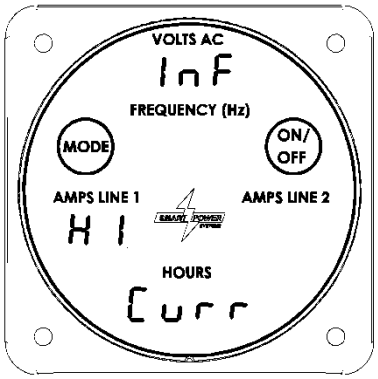

Figure 34 – Line 1 High Current Fault Display Example

Diagnostic Faults:

The following is a list of the diagnostic faults as displayed on the Command & Control Center, with a brief explanation of each.

CCC Display	Class	Description
ULU <x> SHrt	Alarm	The control valve feedback is invalid, indicating the system is not under control. The valve indicated in the "frequency" window may be shorted.
ULU <x> oPEn	Alarm	The control valve feedback is invalid, indicating the system is not under control. The valve coil indicated in the "frequency" window may be open.
HI cUrr	Alarm	Overcurrent condition. The line in which the overcurrent condition exists is indicated by the location of the string: If in the "Amps Line 1" field, the overcurrent is in line 1; If in the "Amps Line 2" field, the overcurrent is in line 2.
bAd UoLt	Override	Voltage Sensor Fault. The indicated voltage may be incorrect, or not under control.
cAL UoLt	Service Warning	The voltage lines are perceived to need re-calibration
HI PrESS	Alarm	Oil pressure is too high (PSI rating dependent on kW rating)
bAd PrESS	Service Warning	Pressure transducer signal is out of normal operating range and requires service/replacement. May cause generator to not operate.
Lo FLo	Service Warning	Generator output frequency not able to be controlled high enough. Pump adjustment or cleaning is likely needed.
Add OIL LO	Override	Reservoir oil level low. Add oil through filler cap to clear. Check for oil leaks.
OIL Hot <Temp>	Alarm	Oil temperature is getting too high (>185° F). Measured Temperature in the "Hours" field
OIL Hot <Temp>	Override	Oil Temperature is too high (>195° F).
OIL Hot <Temp>	Shutdown	Oil Temperature dangerous (>220° F).
bAd Ind	Alarm	Indicator Light Ground Fault. The indicator light may not function properly.
bAd tSnS	Override	Temperature Sensor Fault. The indicated oil temperature may be incorrect.
bAd ALrt	Alarm	Buzzer Ground Fault. The audible alert buzzer may not function properly.
bAd diSP	Alarm	The Command & Control Center may not operate properly.
bAd dAtA	Service Warning	The Command & Control Center is not receiving proper communications and may not operate properly.
cHG OIL FILt	Service Warning/Override	Service Warning: Change oil
LS FAn	Alarm	Fan Short. The Fan may not operate properly.
FAn oPEn	Alarm	Fan perceived to be disconnected and may not operate properly.
Lo U In	Alarm	VDC to the ECU below validated operational limits. Potential for undesired results or damage exists.
HI U In	Alarm	VDC to the ECU above validated operational limits. Potential for undesired results or damage exists.

Table 2

Note: The fault "Classes" are defined in the table below:

Fault Class	Description
Service Warning	Maintenance required
Alarm	A condition requires the immediate attention of the operator
Shutdown	A condition causes the immediate shutdown of the generator
Override	A condition that will cause the generator to shut down in 30 minutes unless explicitly overridden by the operator

Table 3

The complete list of faults, including conditions and times may be found in Table 4, below.

SPS J1939 ECU FAULT TABLE						
Fault	**Mature Condition**	**Mature Time[1]**	**Demature Condition**	**Demature Time[1]**	**Shutdown**	**Shutdown Criteria**
Valve Open	Open circuit on valve control lines (valve is disconnected)	1 second	Repair open circuit (connect valve), Acknowledge Fault on CCC	1 second	No	Valve 1[2]
Valve Short	Short circuit on valve control lines	Instantaneous	Repair short circuit	10 seconds	Yes	Valve 1[2]
Temperature Sensor	Temperature sensor input line open (temperature sensor is disconnected)	1 second	Repair open circuit (connect temperature sensor)	1 second	Yes	Fault active for 30 minutes
Fan Output Open	Voltage and current measuements indicate open fan circuit	12 seconds	Repair open circuit (connect fan)	12 seconds	No	NA
Fan Output Short	Excessive fan current to ground	1 second	Repair short circuit / replace fan	1 second	No	NA
Over Temp 185	Oil temperature is greater than 185°F	1 second	Oil temperature is less than 185°F	1 second	No	NA
Over Temp 195	Oil temperature is greater than 195°F	1 second	Oil temperature is less than 195°F	1 second	Yes	30 minutes unless override
Over Temp 220	Oil temperature is greater than 220°F	1 second	Oil temperature is less than 220°F	1 second	Yes	Instantaneous
Under Temperature (Visual Only)	Oil temperature is less than 40°F	1 second	Oil temperature is greater than 40°F	1 second	No	Will not start below 40°F
Indicator Short	Indicator drive line is shorted to battery	1 second	Remove short to battery on indicator drive line	1 second	No	NA
Buzzer Short	Buzzer drive line is shorted to battery	1 second	Remove short to battery on buzzer drive line	1 second	No	NA
Output Voltage	Output AC voltage is outside ±10% of target voltage	1 minute	Output AC voltage is within ±10% of target voltage	1 minute	Yes	Fault active for 30 minutes
Load Imbalance[3]	Phase power is outside ±20% of power on other phases	30 second	Phase power is within ±20% of power on other phases	1 second	Yes	Fault active for 30 minutes
Over Current[4]	True power > Output kW rating	5 seconds	True Power < Output kW rating	5 seconds	No	NA
Phase A Over Current	Phase A current > 110% of rating	5 seconds	Phase A current < 110% of rating	5 seconds	No	NA
Phase B Over Current	Phase B current > 110% of rating	5 seconds	Phase B current < 110% of rating	5 seconds	No	NA
Phase C Over Current[3]	Phase C current > 110% of rating	5 seconds	Phase C current < 110% of rating	5 seconds	No	NA
Voltage Calibration	Unloaded line voltages > 15VAC from each other	5 seconds	Line voltages < 15 VAC from each other	5 seconds	No	NA
DC Input Voltage	DC voltage < 9 VDC or > 16 VDC	3 seconds	9 < VDC < 16	3 seconds	No	NA
High Pressure	Oil Pressure > calibrated value	3 seconds	Oil pressure < calibrated value	3 seconds	No	NA
Low Flow	Low output frequency and valve PID(s) out of control range	10 seconds	Frequency > 58 Hz and valve PID(s) in control range	10 seconds	No	NA
Bad Pressure	Pressure transducer signal is outside normal range (open or shorted)	Instantaneous	Transducer signal in normal range (.5 - 4.5VDC.)	Instantaneous	Yes	Instantaneous if open and running
No PTO pressure	Oil pressure is less than 100 psi (PTO is off)	50 ms	Oil pressure is greater than 100 psi (PTO is on)	50 ms	Yes	Instantaneous if running

Table 4

Notes:

(1) Times are representative.
(2) Where more than one proportional valve is used due to flow requirements.
(3) 3 phase generators only.
(4) For external field excitation generators. Power output will be limited to alternator maximum KVA rating via limited field current.
(5) CCC displays “bad data” after 1 minute loss of communication with ECU.

Hydraulic Problems:

1. Cavitation:

Cavitation is caused by trying to pump more fluid than is available at the pump inlet due to system restrictions. Pump cavitation sounds like “marbles” passing through the pump. Conditions frequently associated with cavitation are the following:

a. Too many restrictive fittings such as elbows and reducers on the pump inlet hose.
b. Tight bends or kinks in pump inlet hose and/or tubing.
c. Insufficient tray height above the pump, resulting in low head pressures.
d. Under sized pump inlet hose (minimum pump inlet hose size is 1”).
e. Excessively long inlet hose (may be corrected by using larger hose).
f. Cold hydraulic fluid.

Finding the cause and correcting it should stop cavitation.

Install a 0-25 psig gauge in line between inlet hose fitting and pump inlet port. Engage PTO. Operate genset with no load for thirty minutes to purge air out of the system. Observe the pressure reading. If the pressure is not positive, system repair/rework is required.

2. Aeration:

Aeration results from air being drawn into the system through leak paths or a low fluid condition. Aeration makes a “growling” sound and produces visible bubbles in the fluid stream and/or reservoir. Conditions frequently associated with aeration are the following:

a. Air leaks in the pump inlet flow path.
b. Low fluid level allowing air to be drawn into the system.

Verify there are no air bubbles in the fluid by viewing inside the reservoir. If there are air bubbles, check fluid level, tighten all fittings, and look for cracked fittings or hose leaks on the pump inlet line. Replace any suspect parts and adjust fluid level.

After correcting any problems, again operate the generator thirty minutes to purge air out of the hydraulic fluid. Note that any bubbles seen in the reservoir indicate leakage in the pump inlet line.

3. System Overheating:

System overheating may be caused by re-circulation of hot air through oil cooler, dirty or obstructed oil cooler fins, restricted hydraulic fluid flow, excessive generator load, restricted airflow, previously overheated (old) fluid, non-functional fan, or improperly adjusted pump.

a. Check the oil cooler fins for debris or damage. Clean and/or replace cooler.
b. Verify that the generator load is not excessive.

c. Verify that there is proper ventilation.
d. Verify that the DC fan motor is operating properly.
e. Verify that warm air from the fan outlet is not being re-circulated through the cooler.
f. Check the hydraulic fluid to see if it is black or darkened. This indicates overheating or aging. Drain and flush the system.
g. Fill with new, clean hydraulic fluid.

4. **Low Hydraulic Fluid Level In Reservoir:**

Low hydraulic fluid level in reservoir can be caused by leaking fittings, hoses or pipes.

a. Check all the fittings for leaks. Tighten any loose fittings that are found (but do not over-tighten).
b. Replace defective fittings.
c. Check all tubing for leaks. Repair or replace as necessary.

Electrical Problems

1. **No Output Voltage:**

a. No output voltage may be caused by excessive current draw, opening the circuit breakers. (The circuit breakers can be found mounted on the generator wiring enclosure.) Remove all electrical loads from the generator and reset breaker(s). Re-engage electrical load in increments. If possible, monitor current draw with the Command & Control Center to determine which portion of the load is causing the breaker to open.

b. The PTO will not engage or is faulty. Contact Smart Power Systems®.

c. The generator's system controller has lost power (reference Figure 2 and Figure 8). The Command & Control Center would stay dark even after the mode and/or on/off switch is pressed. Verify that the vehicle +12V supply has both +12 volts and ground. If 12 volts are not available check the vehicle for a blown fuse or a loose/open electrical connection.

d. The stator field may be shorted or open. Disconnect wires 1, 2, 3, and 4 from the terminal strip located in the generator wiring enclosure and make resistance measurements. The resistance between wires 1 and 2, and wires 3 and 4 should be between essentially 0 ohms. Contact Smart Power Systems® at (231) 832-5525 if any problems are found.

WARNING:

Do not attempt to measure stator field resistance while the system is operating. Electrical shock may occur.

e. The exciter field may be shorted or open. With a flashlight, check the generator windings visible through the ventilation slots. If the windings appear burnt in any area, the generator must be replaced. If the windings are not burnt, disconnect the exciter field from the field capacitor. Measure the resistance of the exciter field using an ohmmeter. The resistance of the exciter field should be essentially 0 ohms. Contact Smart Power Systems® at (231) 832-5525 if the resistance is outside this range.

WARNING:

Do not attempt to measure the exciter field resistance while the system is operating. Electrical shock may occur.

f. Exciter field capacitor may be faulty. Disconnect the exciter field from the field capacitor. Using a screwdriver, short leads of capacitor together to discharge capacitor. Measure capacitance against its printed rating using a capacitance meter. Note that the capacitors must be disconnected from the generator and each other (if there is more than one) before measuring.

WARNING:

Do not attempt to test the field capacitor with the system running. Electrical shock may occur.

g. The generator drive motor or coupling is faulty. Observe the generator while the system is engaged. If the coupling is not turning, or if it is turning but the generator is not, one or more of the coupling components may be damaged and must be replaced. Also, verify that the coupling halves are mating. If the coupling halves are not mating, remove the hydraulic motor from the generator to inspect coupling and the rubber insert between the coupling halves. Replace components as necessary, reposition and tighten coupling set screw so both halves of the coupling are mating correctly.

h. The pump is faulty. If no faults are found in steps a. through g., the problem is likely to be a non-functional pump. Contact Smart Power Systems® at (231) 832-5525 for further instructions.

2. **Output voltage exceeds 260 volts or falls below 220 volts AC on a 240 volt line:**
Verify that the hydraulic system is not overheating by viewing the temperature as displayed by the Command & Control Center. The temperature should not exceed 165° F. If the temperature is greater than 175° F, follow instructions for system overheating (see hydraulic problems).

   a. The hydraulic pump speed may be too low. Verify that the engine speed is in the required range (see Table 1). Adjust the engine speed if necessary.

   b. The generator speed may be incorrect. The generator output should be between 59-62 Hz. If it is not, contact Smart Power Systems® at (231) 832-5525 for further instructions.

   c. If the problem is not detected by performing steps a. through c., contact Smart Power Systems®.

3. **Generator Noise:**

   Generator noise can be caused by defective generator bearings or a faulty generator/hydraulic motor coupling.

   a. Contact Smart Power Systems® if bearings need replacement.

   b. Check the generator/hydraulic motor coupling and replace it if necessary.

   If problems occur other than those listed call **Smart Power Systems® (231) 832-5525** for additional assistance.

NOTE:
For a complete copy of Manufacturer's Warranty please visit our website at:
www.smartpower.com/warranty